Column

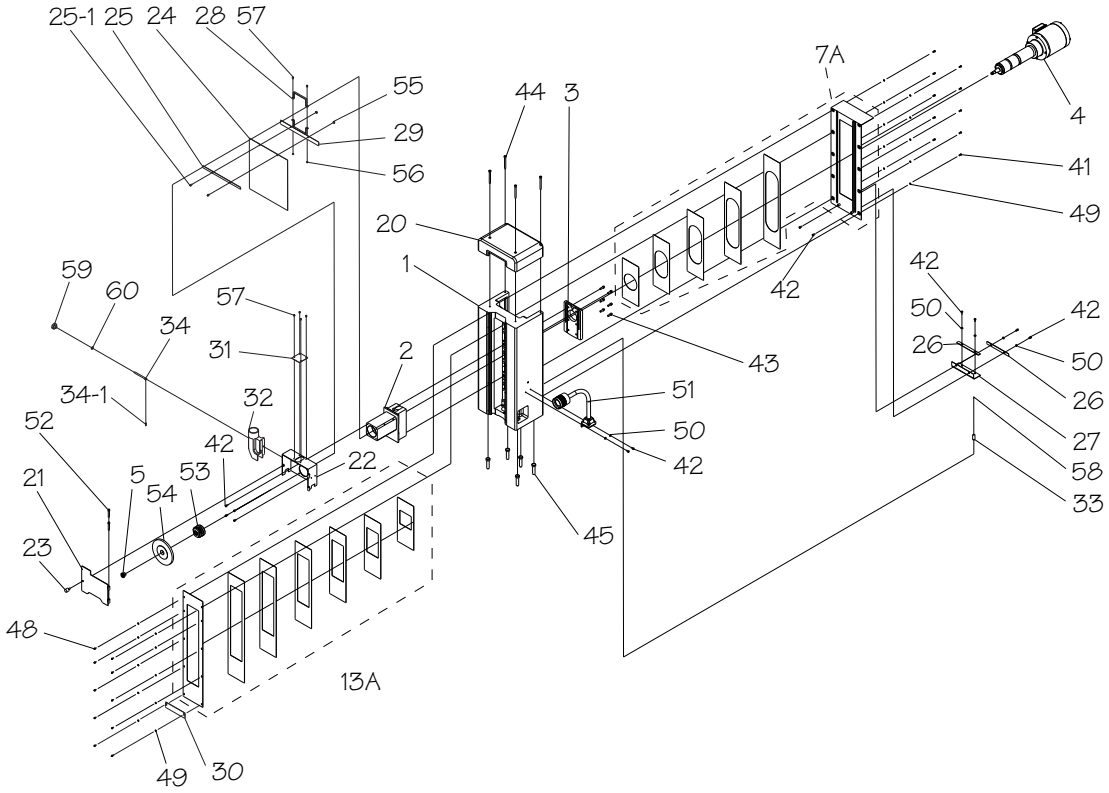

REF	PART #	DESCRIPTION
1	PSB1029001	COLUMN
2	PSB1029002	WHEEL HEAD
3	PSB1029003	REAR COVER
4	PSB1029004	SPINDLE
5	PSB1029005	WHEEL LOCK NUT
7A	PSB1029007A	REAR TELESCOPIC COVER ASSEMBLY
13A	PSB1029013A	FRONT TELESCOPIC COVER ASSEMBLY
20	PSB1029020	COLUMN COVER
21	PSB1029021	WHEEL ACCESS COVER
22	PSB1029022	WHEEL GUARD
23	PSB1029023	KNURLED STEEL KNOB M8-1.25 X 16
24	PSB1029024	DUST COVER
25	PSB1029025	DUST COVER CLAMP
25-1	PSB1029025-1	BUTTON HD CAP SCR M6-1 X 12
26	PSB1029026	LOWER DUST COVER CLAMP
27	PSB1029027	LOWER DUST COVER
28	PSB1029028	DUST COVER BRACKET
29	PSB1029029	DUST BRACKET CLAMP
30	PSB1029030	TELESCOPIC COVER BRACKET
31	PSB1029031	CHIP GUARD PLATE
32	PSB1029032	CHIP CHUTE

REF	PART #	DESCRIPTION
33	PSB1029033	DRAIN LINE
34	PSB1029034	DRILLED HD BOLT M8-1.23 X 100
34-1	PSB1029034-1	ROLL PIN 3 X 20
41	PSB1029041	CAP SCREW M5-.8 X 12
42	PSB1029042	CAP SCREW M6-1 X 12
43	PSB1029043	CAP SCREW M8-1.25 X 25
44	PSB1029044	CAP SCREW M8-1.25 X 90
45	PSB1029045	HEX BOLT M16-2 X 65
48	PSB1029048	BUTTON HD CAP SCR M5-.8 X 12
49	PSB1029049	FLAT WASHER 5MM
50	PSB1029050	FLAT WASHER 6MM
51	PSB1029051	WORK LAMP
52	PSB1029052	ROLL PIN 8 X 55
53	PSB1029053	WHEEL FLANGE ASSEMBLY
54	PSB1029054	GRINDING WHEEL 7.5D X .5W X 1.25B
55	PSB1029055	HEX NUT M6-1
56	PSB1029056	HEX NUT M5-.8
57	PSB1029057	BUTTON HD CAP SCR M6-1 X 10
58	PSB1029058	STEEL FLUTED RIVET 2 X 6MM
59	PSB1029059	KNOB M8-1.25
60	PSB1029060	FLAT WASHER 8MM

Elevation Control

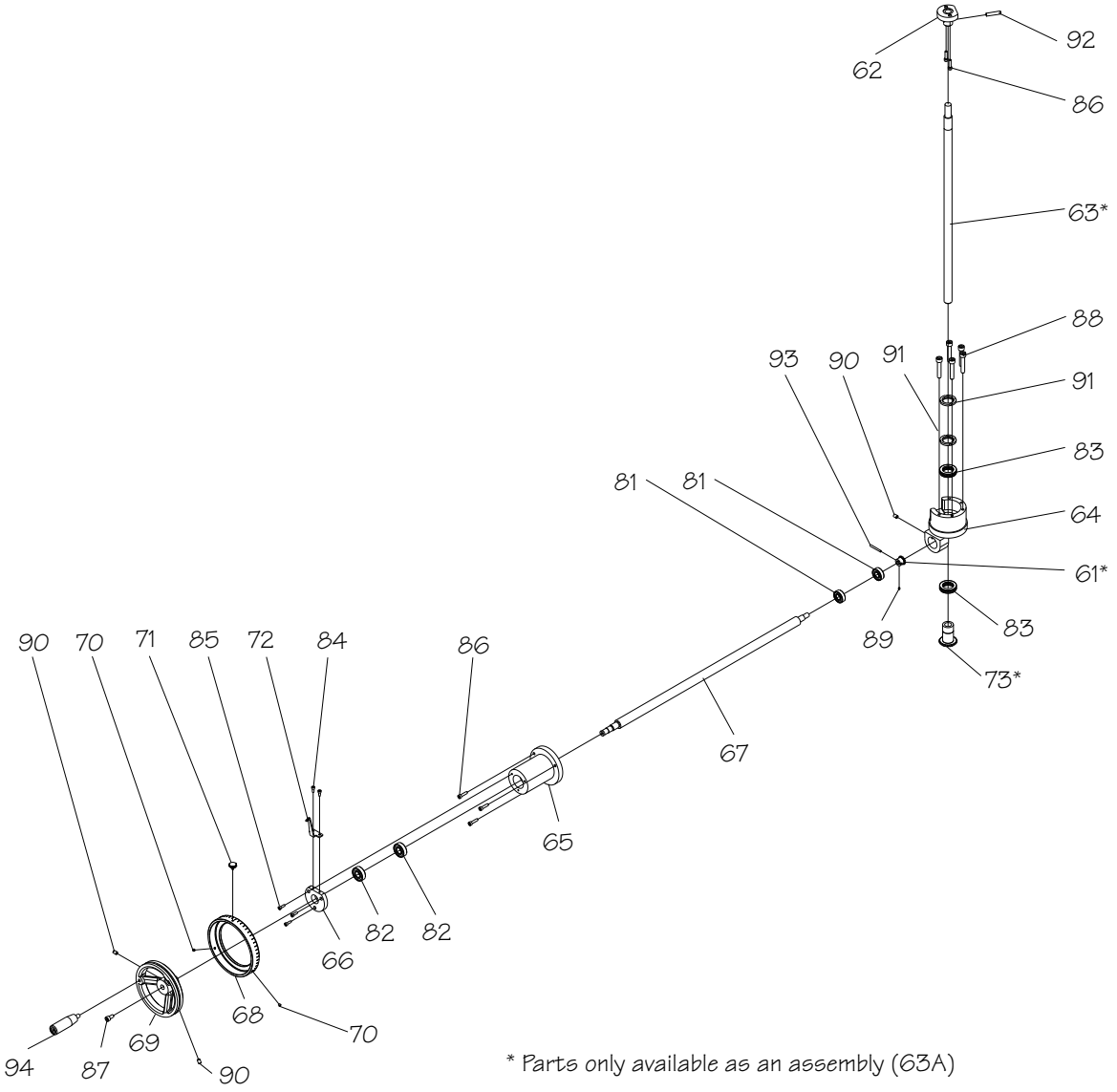

* Parts only available as an assembly (63A)

REF	PART #	DESCRIPTION
61	PSB1029061	SMALL LEVEL GEAR
62	PSB1029062	CONNECTOR
63	PSB1029063	VERTICAL LEADSCREW
63A	PSB1029063A	VERTICAL LEADSCREW W/ BEVEL GEARS
64	PSB1029064	BEVEL GEAR BRACKET
65	PSB1029065	SHAFT HOUSING
66	PSB1029066	BEARING COVER
67	PSB1029067	SHAFT
68	PSB1029068	GRADUATED DIAL
69	PSB1029069	VERTICAL HANDWHEEL
70	PSB1029070	SET SCREW M6-1 X 8
71	PSB1029071	KNURLED SCREW M6-1 X 12
72	PSB1029072	INDICATOR
73	PSB1029073	BEVEL GEAR

REF	PART #	DESCRIPTION
81	PSB1029081	BALL BEARING 6202ZZ
82	PSB1029082	BALL BEARING 6203ZZ
83	PSB1029083	THRUST BEARING TB51106
84	PSB1029084	CAP SCREW M5-.8 X 12
85	PSB1029085	CAP SCREW M5-.8 X 16
86	PSB1029086	CAP SCREW M6-1 X 25
87	PSB1029087	CAP SCREW M8-1.25 X 16
88	PSB1029088	CAP SCREW M10-1.5 X 55
89	PSB1029089	SET SCREW M4-.7 X 5
90	PSB1029090	SET SCREW M8-1.25 X 12
91	PSB1029091	LEADSCREW SPANNER NUT
92	PSB1029092	TAPER PIN M8 X 40
93	PSB1029093	TAPER PIN M4 X 40
94	PSB1029094	VERTICAL HANDWHEEL HANDLE

Table

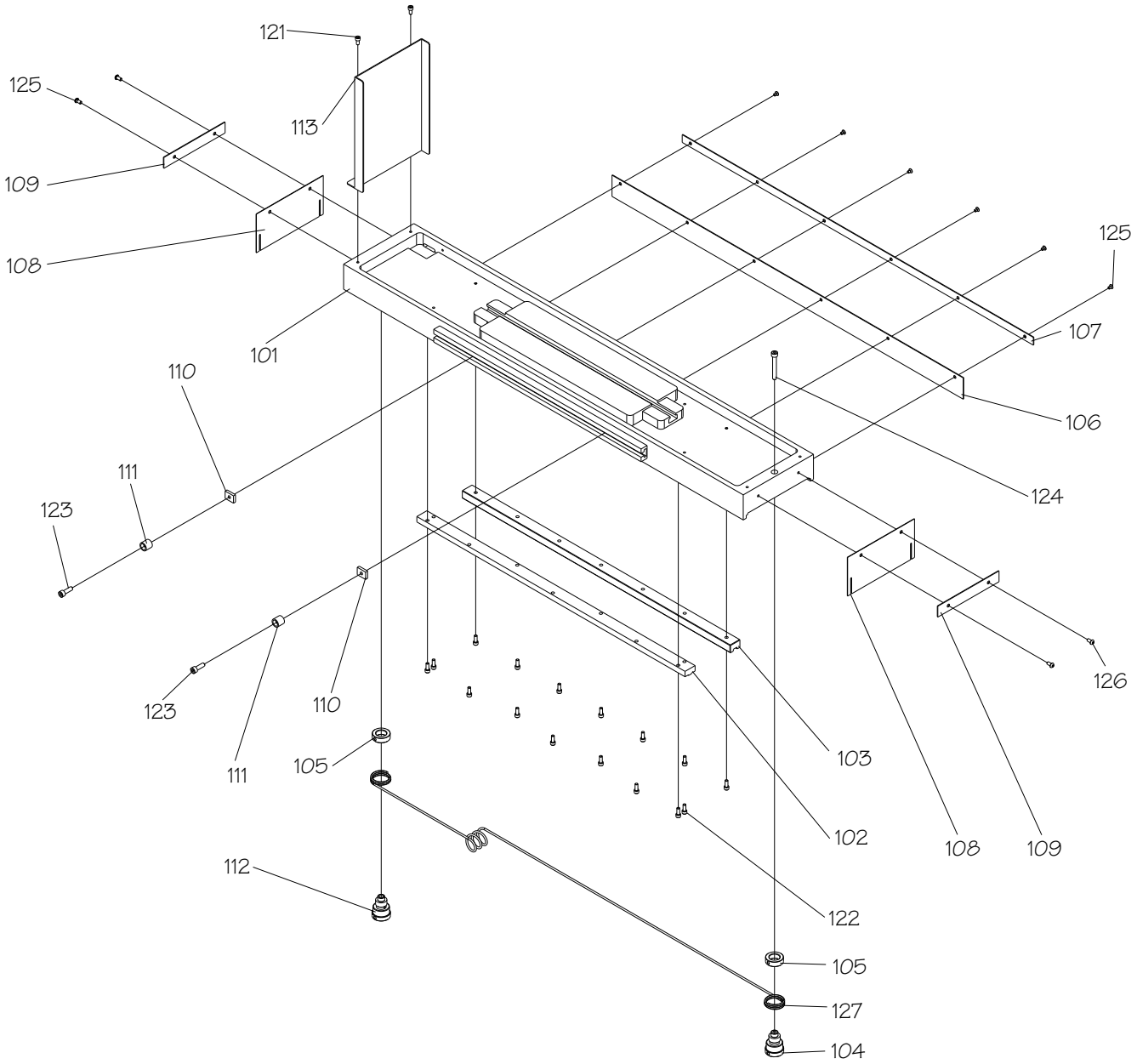

REF	PART #	DESCRIPTION
101	PSB1029101	TABLE
102	PSB1029102	FRONT RAIL
103	PSB1029103	REAR RAIL
104	PSB1029104	LEFT CABLE SPOOL
105	PSB1029105	CABLE PULLEY COLLAR
106	PSB1029106	WIPER
107	PSB1029107	FIXED PLATE
108	PSB1029108	RUBBER PLATE
109	PSB1029109	FIXED PLATE
110	PSB1029110	SQUARE NUT M8-1.25

REF	PART #	DESCRIPTION
111	PSB1029111	STOP PIN
112	PSB1029112	RIGHT CABLE SPOOL
113	PSB1029113	DUST GUARD
121	PSB1029121	CAP SCREW M6-1 X 12
122	PSB1029122	CAP SCREW M6-1 X 16
123	PSB1029123	CAP SCREW M8-1.25 X 25
124	PSB1029124	CAP SCREW M8-1.25 X 60
125	PSB1029125	FLAT HD SCR M5-.8 X 8
126	PSB1029126	BUTTON HD CAP SCR M6-1 X 12
127	PSB1029127	CABLE

Base

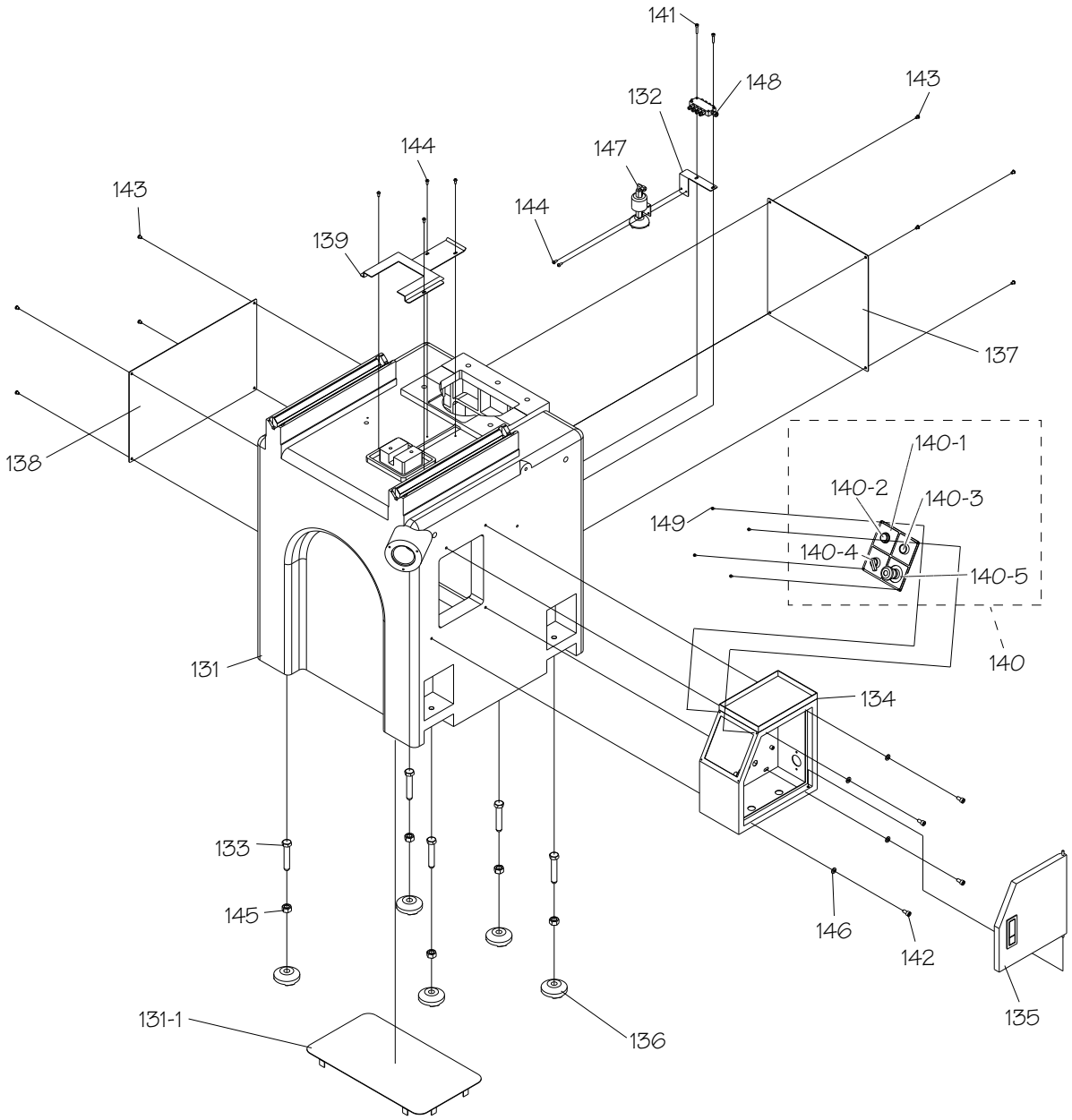

REF	PART #	DESCRIPTION
131	PSB1029131	BASE
131-1	PSB1029131-1	BOTTOM COVER
132	PSB1029132	PUMP SEAT
133	PSB1029133	FOOT BOLT M16-2 X 88
134	PSB1029134	CONTROL BOX
135	PSB1029135	BOX COVER
136	PSB1029136	FOOT
137	PSB1029137	BACK COVER
138	PSB1029138	LEFT SIDE COVER
139	PSB1029139	TOP COVER
140	PSB1029140	CONTROL PANEL ASSEMBLY
140-1	PSB1029140-1	CONTROL PANEL COVER
140-2	PSB1029140-2	INDICATOR LAMP

REF	PART #	DESCRIPTION
140-3	PSB1029140-3	POWER BUTTON
140-4	PSB1029140-4	PUMP SWITCH
140-5	PSB1029140-5	EMERGENCY STOP BUTTON
141	PSB1029141	CAP SCREW M5-.8 X 25
142	PSB1029142	CAP SCREW M8-1.25 X 16
143	PSB1029143	BUTTON HD CAP SCR M6-1 X 8
144	PSB1029144	BUTTON HD CAP SCR M5-.8 X 12
145	PSB1029145	HEX NUT M16-2
146	PSB1029146	FLAT WASHER 8MM
147	PSB1029147	PUMP
148	PSB1029148	OIL ADJUST VALVE
149	PSB1029149	BUTTON HD CAP SCR M4-.7 X 8

Saddle

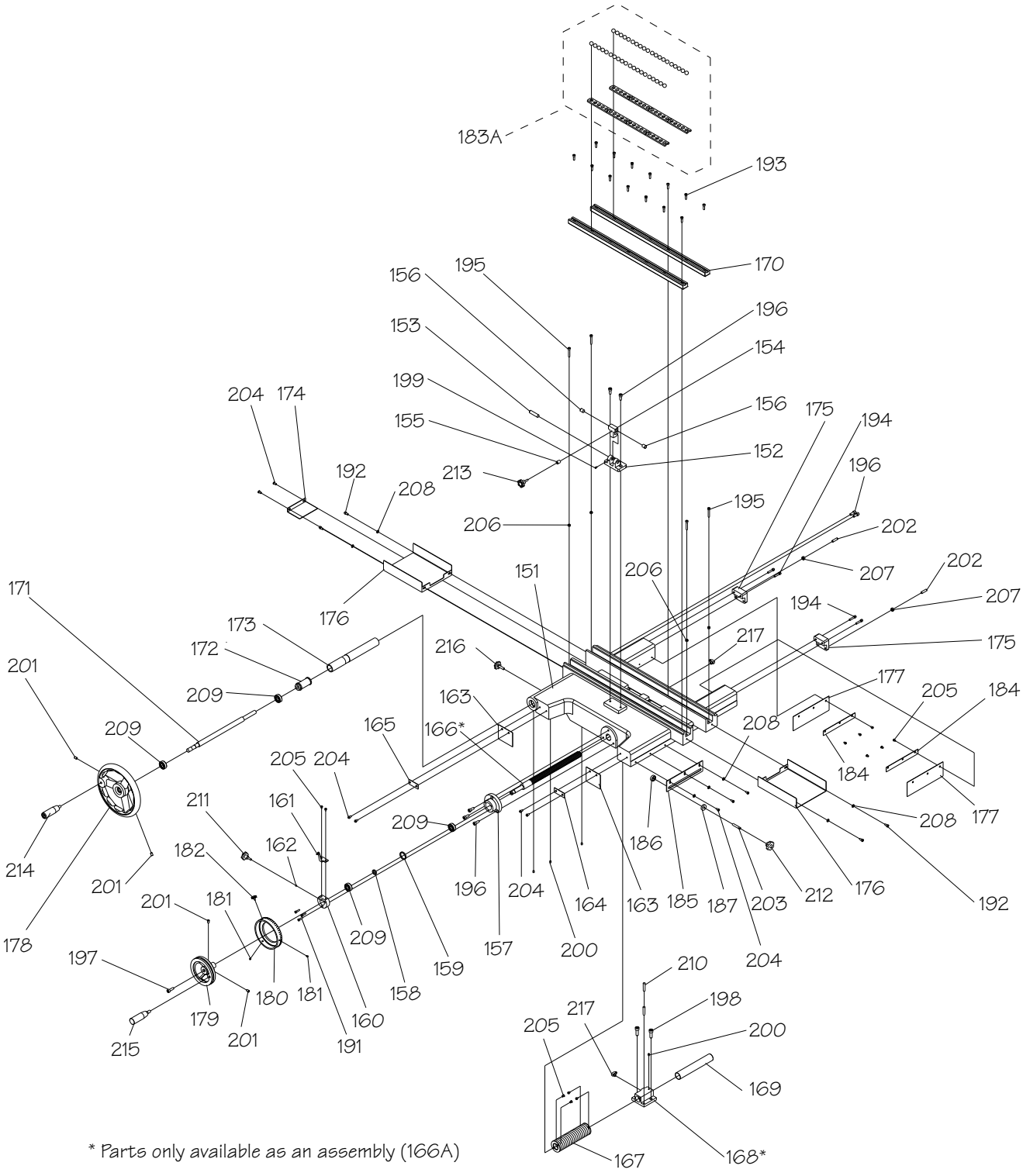

* Parts only available as an assembly (166A)

Main Assembly List

REF	PART #	DESCRIPTION
151	PSB1029151	SADDLE
152	PSB1029152	STOPPER BRACKET
153	PSB1029153	STOP BLOCK HINGE PIN
154	PSB1029154	STOPPER
155	PSB1029155	RING
156	PSB1029156	STOP PIN
157	PSB1029157	HANDWHEEL BRACKET
158	PSB1029158	INNER SPACER
159	PSB1029159	OUTER SPACER
160	PSB1029160	INDICATOR SEAT
161	PSB1029161	INDICATOR
162	PSB1029162	FLAT WASHER 6MM
163	PSB1029163	RUBBER CHIP GUARD
164	PSB1029164	CHIP GUARD PLATE
165	PSB1029165	CHIP GUARD PLATE
166	PSB1029166	CROSS FEED LEADSCREW
166A	PSB1029166A	CROSS LEADSCREW ASSEMBLY
167	PSB1029167	LEAD SCREW COVER
168	PSB1029168	LEADSCREW NUT
169	PSB1029166A	REAR DUST COVER
170	PSB1029170	RAIL
171	PSB1029171	TRANSMISSION SHAFT
172	PSB1029172	CABLE DRUM
173	PSB1029173	SHAFT SLEEVE
174	PSB1029174	COVER
175	PSB1029175	STOPPER
176	PSB1029176	PLATE
177	PSB1029177	RUBBER PLATE
178	PSB1029178	LONGITUDINAL HANDWHEEL
179	PSB1029179	CROSS HANDWHEEL
180	PSB1029180	GRADUATED DIAL
181	PSB1029181	CHECK NUT
182	PSB1029182	RATCHET NUT
183	PSB1029183	STEEL BALL RETAINER

REF	PART #	DESCRIPTION
183A	PSB1029183A	TABLE BEARING ASSEMBLY
184	PSB1029184	FIXED PLATE
185	PSB1029185	LIMIT PLATE
186	PSB1029186	COLLAR NUT M8-1.25
187	PSB1029187	SPACER 8MM
191	PSB1029191	CAP SCREW M5-.8 X 20
192	PSB1029192	CAP SCREW M6-1 X 12
193	PSB1029193	CAP SCREW M6-1 X 20
194	PSB1029194	CAP SCREW M6-1 X 30
195	PSB1029195	CAP SCREW M6-1 X 40
196	PSB1029196	CAP SCREW M8-1.25 X 20
197	PSB1029197	CAP SCREW M8-1.25 X 25
198	PSB1029198	CAP SCREW M10-1.5 X 30
199	PSB1029199	SET SCREW M5-.8 X 4
200	PSB1029200	SET SCREW M6-1 X 8
201	PSB1029201	SET SCREW M8-1.25 X 12
202	PSB1029202	SET SCREW M8-1.25 X 30
203	PSB1029203	SET SCREW M8-1.25 X 45
204	PSB1029204	SET SCREW M6-1 X 12
205	PSB1029205	SET SCREW M5-.8 X 8
206	PSB1029206	HEX NUT M6-1
207	PSB1029207	HEX NUT M8-1.25
208	PSB1029208	FLAT WASHER 6MM
209	PSB1029209	BALL BEARING 6202ZZ
210	PSB1029210	TAPER PIN M8 X 40
211	PSB1029211	KNOB BOLT M6-1 X 21
212	PSB1029212	KNOB M8-1.25
213	PSB1029213	KNOB BOLT M6-1 X 21
214	PSB1029214	LONGITUDINAL HANDWHEEL HANDLE
215	PSB1029215	CROSS HANDWHEEL HANDLE
216	PSB1029216	KNOB BOLT M8-1.25 X 30
217	PSB1029217	90 DEGREE OIL FITTING
218	PSB1029218	HARDENED STEEL BALL 5/8"

Tools

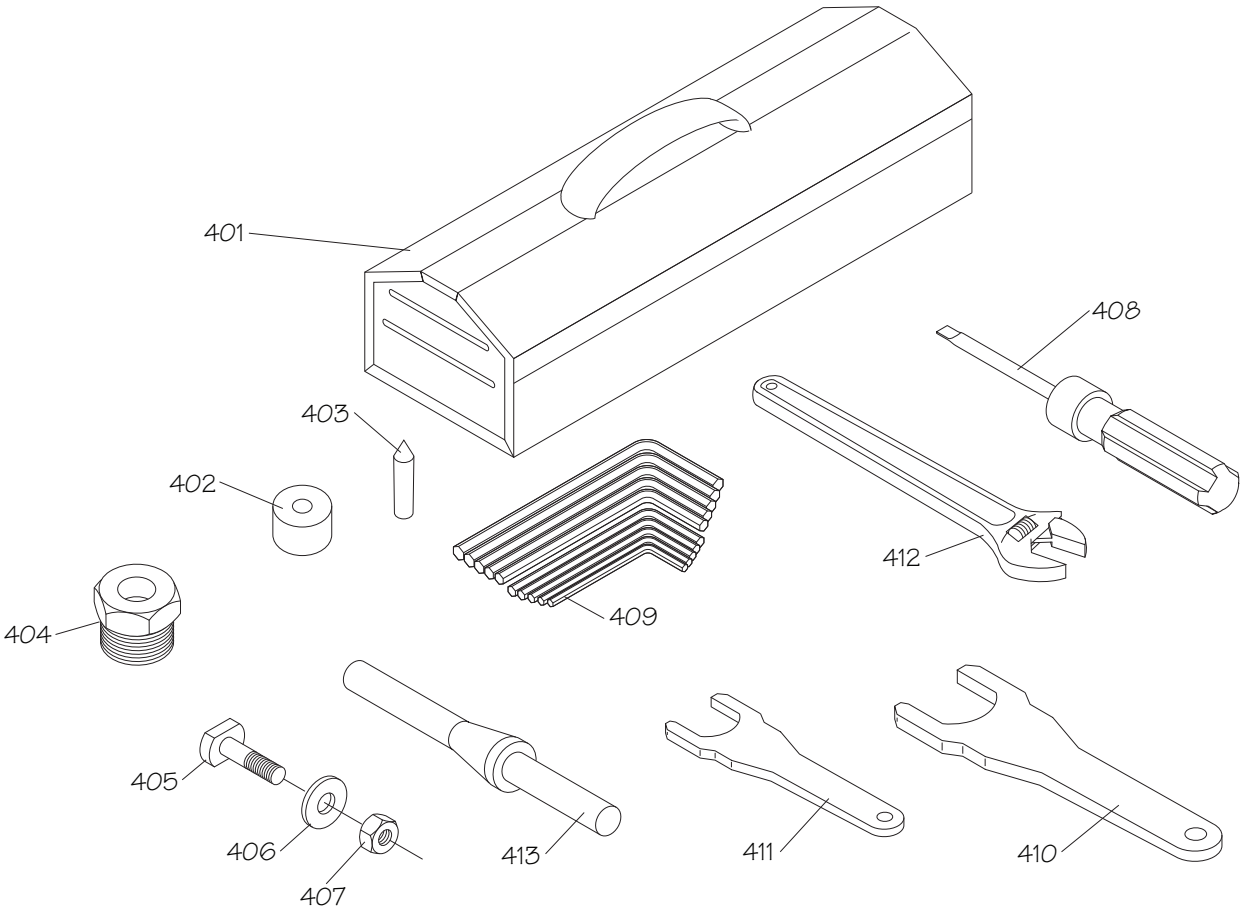

REF	PART #	DESCRIPTION
401	PSB1029401	TOOL BOX
402	PSB1029402	DRESSING TOOL BASE
403	PSB1029403	DIAMOND-TIP DRESSER
404	PSB1029404	HUB PULLER
405	PSB1029405	T-BOLT 1/2-12 x 2
406	PSB1029406	FLAT WASHER 1/2
407	PSB1029407	HEX NUT 1/2-12

REF	PART #	DESCRIPTION
408	PSB1029408	SCREWDRIVER FLAT #2
409	PSB1029409	HEX WRENCH SET 10PC 1.5-10 MM
410	PSB1029410	SPINDLE WRENCH 47MM
411	PSB1029411	SPINDLE WRENCH 27MM
412	PSB1029412	ADJUSTABLE WRENCH 8"
413	PSB1029413	BALANCING SPINDLE

Electrical

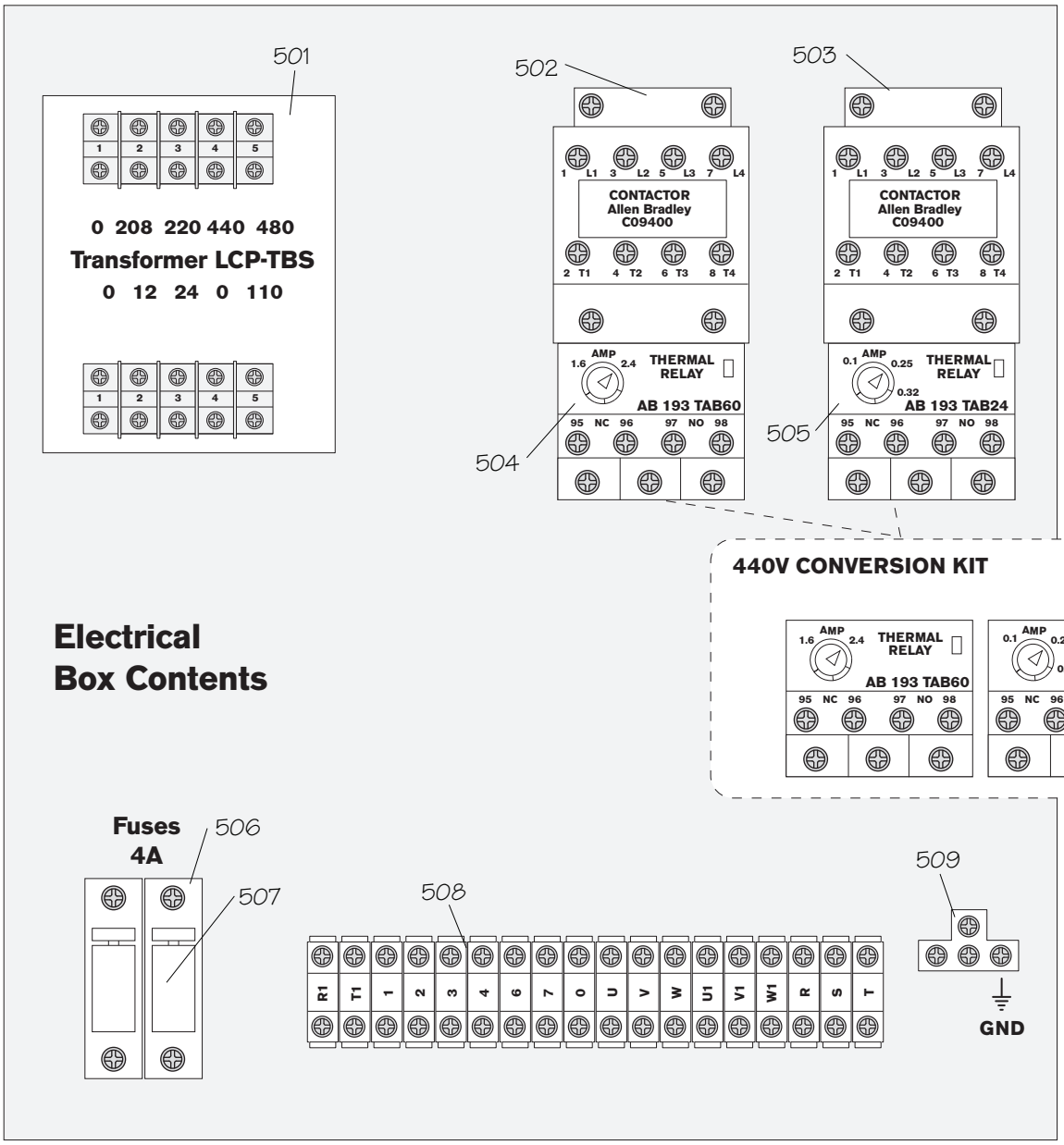

REF	PART #	DESCRIPTION
501	PSB1029501	TRANSFORMER LCP-TBS 0–480V
502	PSB1029502	CONTACTOR AB C09400 24V
503	PSB1029503	CONTACTOR AB C09400 24V
504	PSB1029504	RELAY 1.6–2.4A 193-TAB 60 (220/440V CONV.)
505	PSB1029505	RELAY 0.1–0.32A 193-TAB 24 (220V ONLY)

REF	PART #	DESCRIPTION
506	PSB1029506	FUSE HOLDER
507	PSB1029507	FUSE 4A
508	PSB1029508	TERMINAL BLOCK 18P
509	PSB1029509	GROUNDING BLOCK
510	PSB1029510	RELAY 0.1-0.32A 193-TAB 24 (440V CONV.)

Machine Labels

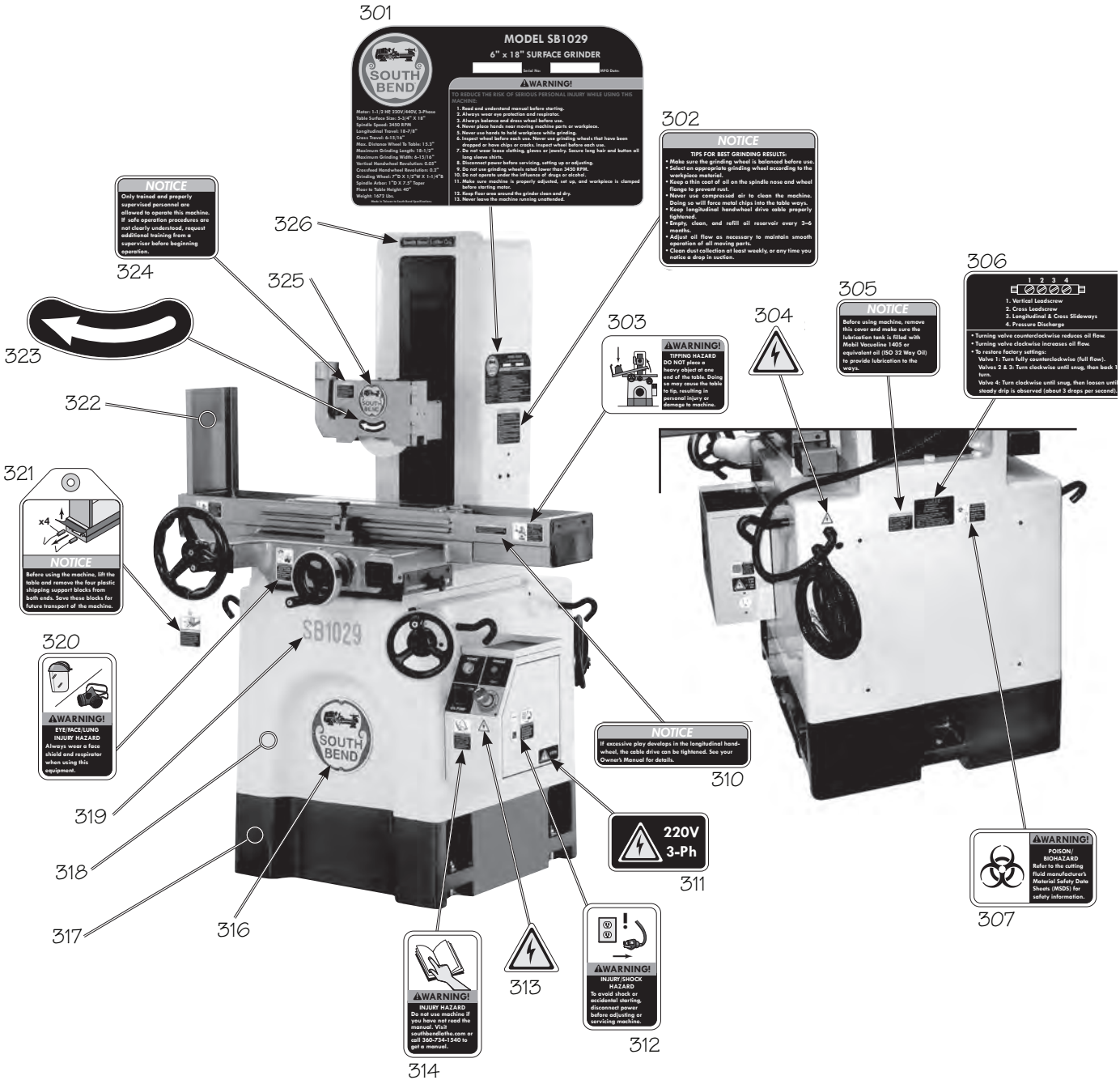

Machine Labels List

REF	PART #	DESCRIPTION
301	PSB1029301	MACHINE ID LABEL
302	PSB1029302	BEST GRINDING RESULTS LABEL
303	PSB1029303	TABLE TIP WARNING LABEL
304	PSB1029304	ELECTRICITY LABEL 1.4
305	PSB1029305	CHECK LUBRICANT LABEL
306	PSB1029306	MANIFOLD ADJUSTMENT LABEL
307	PSB1029307	BIOHAZARD LABEL 3.25 X 2
310	PSB1029310	CABLE DRIVE ADJUSTMENT LABEL
311	PSB1029311	220V 3-PH LABEL
312	PSB1029312	DISC POWER LABEL 2 X 3.25
313	PSB1029313	ELECTRICITY LABEL 1.4
314	PSB1029314	READ MANUAL LABEL 2 X 3.25

REF	PART #	DESCRIPTION
316	PSB1029316	SOUTH BEND NAMEPLATE 5 203MM
317	PSB1029317	SB DARK BLUE TOUCH-UP PAINT
318	PSB1029318	SB GRAY TOUCH-UP PAINT
319	PSB1029319	MODEL NUMBER LABEL
320	PSB1029320	EYE/FACE/LUNG LABEL 2 X 3.25
321	PSB1029321	REMOVE BLOCKS HANG TAG
322	PSB1029322	SB LIGHT BLUE TOUCH-UP PAINT
323	PSB1029323	ROTATION LABEL
324	PSB1029324	TRAINED PERSON ONLY LABEL
325	PSB1029325	SOUTH BEND NAMEPLATE 3 90MM
326	PSB1029326	SOUTH BEND LOGO RECT

⚠WARNING

The safety labels provided with your machine are used to make the operator aware of the machine hazards and ways to prevent injury. The owner of this machine MUST maintain the original location and readability of these safety labels. If any label is removed or becomes unreadable, REPLACE that label before using the machine again. Contact South Bend Lathe Co. at (360) 734-1540 or www.southbendlathe.com to order new labels.