Spindle & Drive Belt

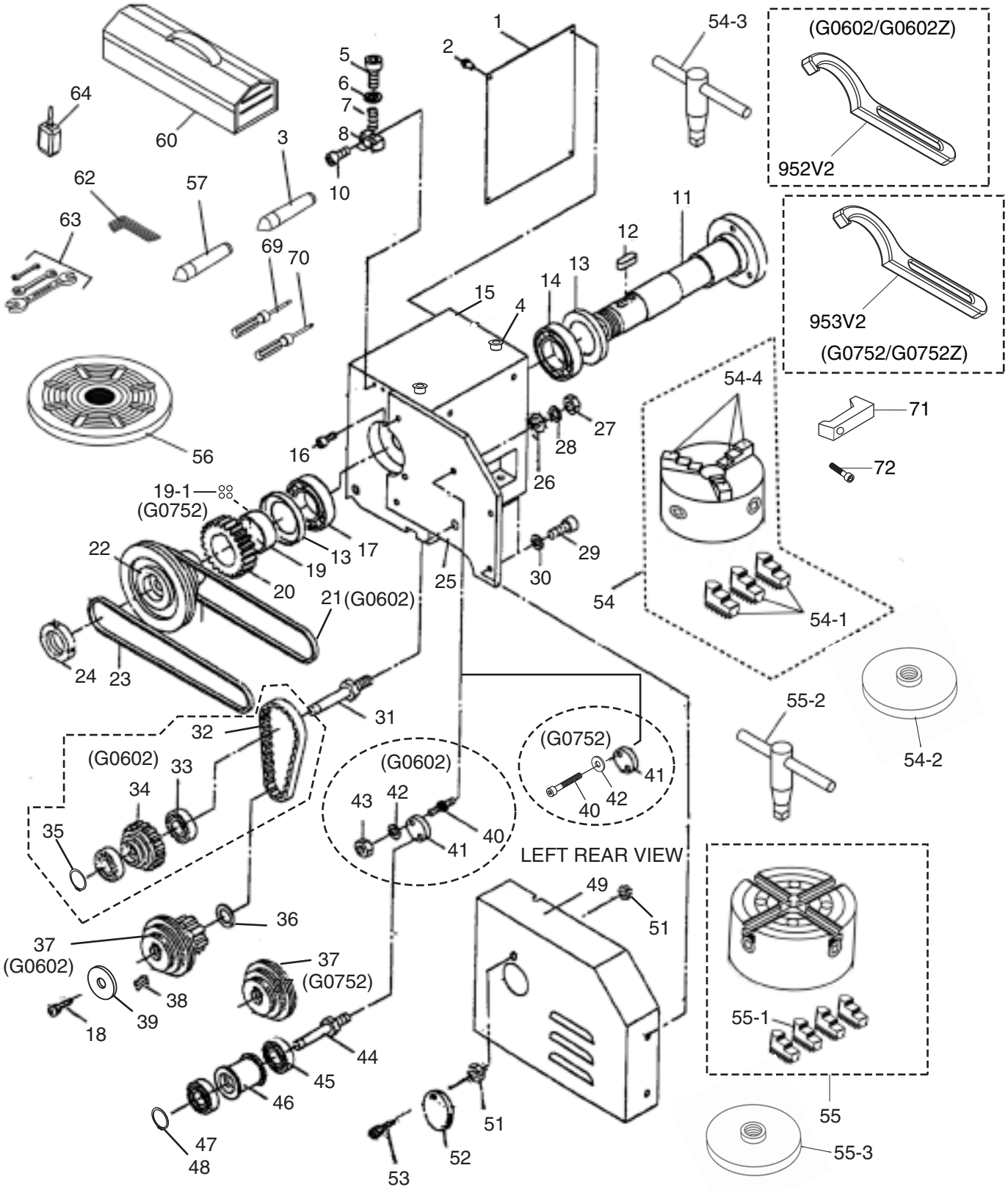

BUY PARTS ONLINE AT GRIZZLY.COM!
Scan QR code to visit our Parts Store.

Spindle & Drive Belt Parts

REF	PART #	DESCRIPTION
1	P0602001	HEADSTOCK REAR COVER
2	P0602002	PHLP HD SCR M4-.7 X 6
3	P0602003	DEAD CENTER MT#4
4	P0602004	BALL OILER 7MM PRESS-IN
5	P0602005	CAP SCREW M6-1 X 25
6	P0602006	FLAT WASHER 6MM
7	P0602007	COMPRESSION SPRING
8	P0602008	CLAMP
10	P0602010	CAP SCREW M6-1 X 25
11	P0602011	SPINDLE
12	P0602012	KEY 10 X 10 X 55
13	P0602013	SPACER
14	P0602014	TAPERED ROLLER BEARING 32009
15	P0602015	HEADSTOCK
16	P0602016	CAP SCREW M8-1.25 X 20
17	P0602017	TAPERED ROLLER BEARING 32009
18	P0602018	CAP SCREW M6-1 X 20
19	P0602019	SPACER (G0602)
19	P0752019	SPEED SENSOR RING W/MAGNETS (G0752)
20	P0602020	GEAR 40T PLASTIC
21	P0602021	V-BELT M-27.5 3L275 (G0602)
22	P0602022	PULLEY C
23	P0602023	V-BELT M-33 3L330
23	P0752023	V-BELT M32 3L320 (G0752)
24	P0602024	SPANNER NUT 37MM
25	P0602025	BRACKET PLATE
26	P0602026	LOCK WASHER 10MM
27	P0602027	HEX NUT M10-1.5
28	P0602028	FLAT WASHER 10MM
29	P0602029	CAP SCREW M5-.8 X 10
30	P0602030	FLAT WASHER 5MM
31	P0602031	GEAR SHAFT
32	P0602032	TIMING BELT 263L (G0602)
33	P0602033	BALL BEARING 6001ZZ (G0602)
34	P0602034	TIMING PULLEY (G0602)
35	P0602035	INT RETAINING RING 12MM (G0602)
36	P0602036	SPACER
37	P0602037	PULLEY A (G0602)
37	P0752037	MOTOR PULLEY (G0752)

REF	PART #	DESCRIPTION
38	P0602038	KEY 6 X 6 X 40
39	P0602039	SPACER
40	P0602040	STANDOFF STUD M10-1.5 X 50, 15, 25 (G0602)
40	P0752040	CAP SCREW M10-1.5 X 20 (G0752)
41	P0602041	MOUNTING PLATE
42	P0602042	FLAT WASHER 10MM
43	P0602043	HEX NUT M10-1.5 (G0602)
44	P0602044	TENSIONER ROLLER SHAFT
45	P0602045	BALL BEARING 6001-2RS
46	P0602046	TENSIONER ROLLER
48	P0602048	EXT RETAINING RING 12MM
49	P0602049	CHANGE GEAR COVER
51	P0602051	HEX NUT M5-.8
52	P0602052	SPINDLE COVER
53	P0602053	PHLP HD SCR M5-.8 X 12
54	P0602054	3-JAW CHUCK 5"
54-1	P0602054-1	3-JAW CHUCK JAW INT 3-PC SET
54-2	P0602054-2	CHUCK BACKPLATE
54-3	P0602054-3	3-JAW CHUCK KEY
54-4	P0602054-4	3-JAW CHUCK JAW EXT 3-PC SET
55	P0602055	4-JAW CHUCK 6.5"
55-1	P0602055-1	4-JAW CHUCK JAWS 4-PC SET
55-2	P0602055-2	4-JAW CHUCK KEY
55-3	P0602055-3	4-JAW CHUCK BACKPLATE
56	P0602056	FACEPLATE 8"
57	P0602057	DEAD CENTER MT#3
60	P0602060	TOOL BOX, EMPTY
62	P0602062	HEX WRENCH SET (2.5,3,4,5,6MM)
63	P0602063	WRENCH SET (8-10, 12-14, 17-19MM)
64	P0602064	BOTTLE FOR OIL
69	P0602069	STANDARD SCREWDRIVER #1
70	P0602070	PHILLIPS SCREWDRIVER #1
71	P0602071	SPINDLE CLAMP
72	P0602072	CAP SCREW M6-1 X 20
952V2	P0602952V2	SPANNER WRENCH V2.03.20 (G0602)
952V2	P0602Z952V2	SPANNER WRENCH V2.03.20 (G0602Z)
953V2	P0752953V2	SPANNER WRENCH V2.03.20 (G0752)
953V2	P0752Z953V2	SPANNER WRENCH V2.03.20 (G0752Z)

Please Note: *We do our best to stock replacement parts whenever possible, but we cannot guarantee that all parts shown here are available for purchase. Call* ***(800) 523-4777*** *or visit our online parts store at* ***www.grizzly.com*** *to check for availability.*

BUY PARTS ONLINE AT GRIZZLY.COM!
Scan QR code to visit our Parts Store.

Apron

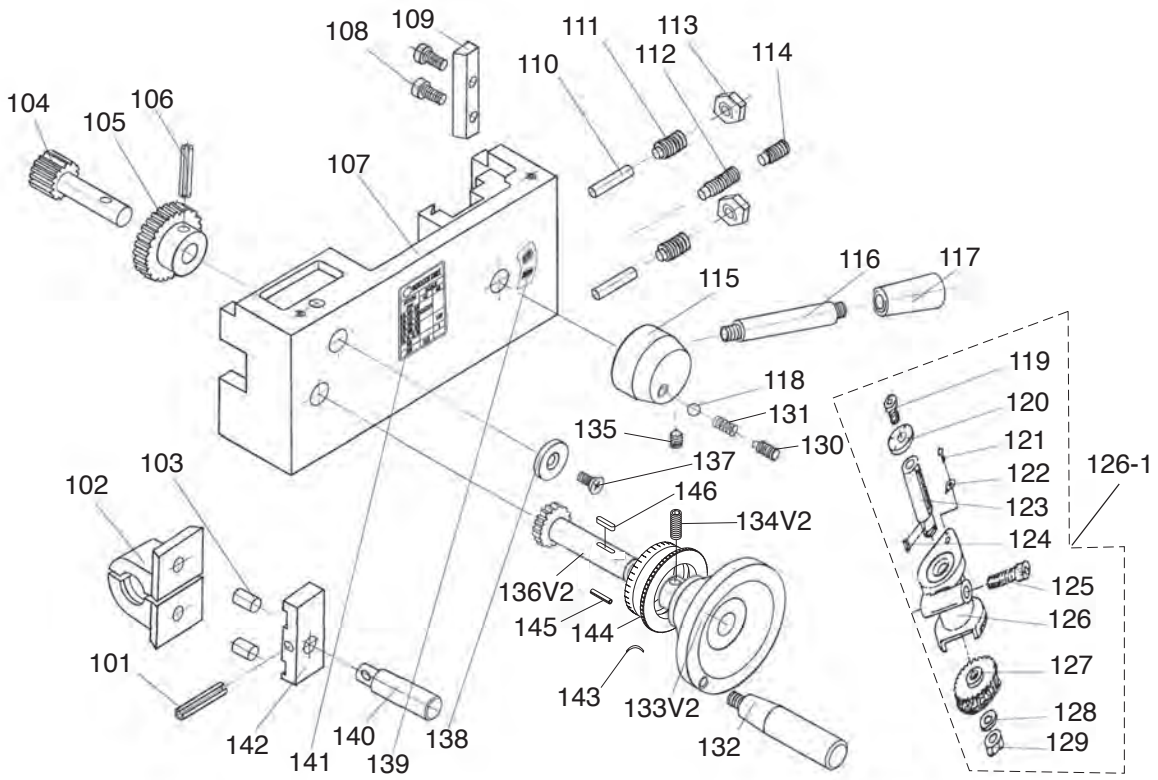

REF	PART #	DESCRIPTION
101	P0602101	ROLL PIN 4 X 14
102	P0602102	HALF-NUT 2-PC
103	P0602103	DOWEL PIN 5 X 12
104	P0602104	GEAR SHAFT
105	P0602105	GEAR
106	P0602106	ROLL PIN 4 X 30
107	P0602107	APRON CASTING
108	P0602108	CAP SCREW M4-.7 X 12
109	P0602109	HALF-NUT GIB
110	P0602110	DOWEL PIN 4 X 16
111	P0602111	SET SCREW M5-.8 X 16
112	P0602112	SET SCREW M6-1 X 25
113	P0602113	HEX NUT M5-.8
114	P0602114	SET SCREW M6-1 X 12
115	P0602115	HALF-NUT LEVER HUB
116	P0602116	HALF-NUT LEVER STUD
117	P0602117	HALF-NUT LEVER HANDLE
118	P0602118	STEEL BALL 5MM
119	P0602119	CAP SCREW M6-1 X 6
120	P0602120	THREAD DIAL
121	P0602121	RIVET 2 X 5MM STEEL FLUTED
122	P0602122	POINTER
123	P0602123	SHAFT

REF	PART #	DESCRIPTION
124	P0602124	KEY 3 X 3 X 10
125	P0602125	CAP SCREW M6-1 X 55
126	P0602126	THREAD DIAL BODY
126-1	P0602126-1	THREAD DIAL ASSY
127	P0602127	SIDE GEAR 48T
128	P0602128	FLAT WASHER 8MM
129	P0602129	HEX NUT M8-1.25
130	P0602130	SET SCREW M6-1 X 6
131	P0602131	COMPRESSION SPRING
132	P0602132	CARRIAGE HANDWHEEL HANDLE
133V2	P0602133V2	CARRIAGE HANDWHEEL
134V2	P0602134V2	SET SCREW M6-1 X 12
135	P0602135	SET SCREW M6-1 X 12 CONE-PT
136V2	P0602136V2	GEAR SHAFT V2.03.17
137	P0602137	FLAT HD SCR M6-1 X 10
138	P0602138	FLAT WASHER 6MM
139	P0602139	HALF-NUT INDICATOR PLATE
140	P0602140	LOCK CAM SHAFT
141	P0602141	THREADED DIAL PLATE
142	P0602142	HALF-NUT BRACKET
143	P0602143	PLATE SPRING
144	P0602144	GRADUATED DIAL
145	P0602145	ROLL PIN 5 X 12
146	P0602146	KEY 3 X 3 X 12

BUY PARTS ONLINE AT GRIZZLY.COM!
Scan QR code to visit our Parts Store.

Tool Post & Compound Rest

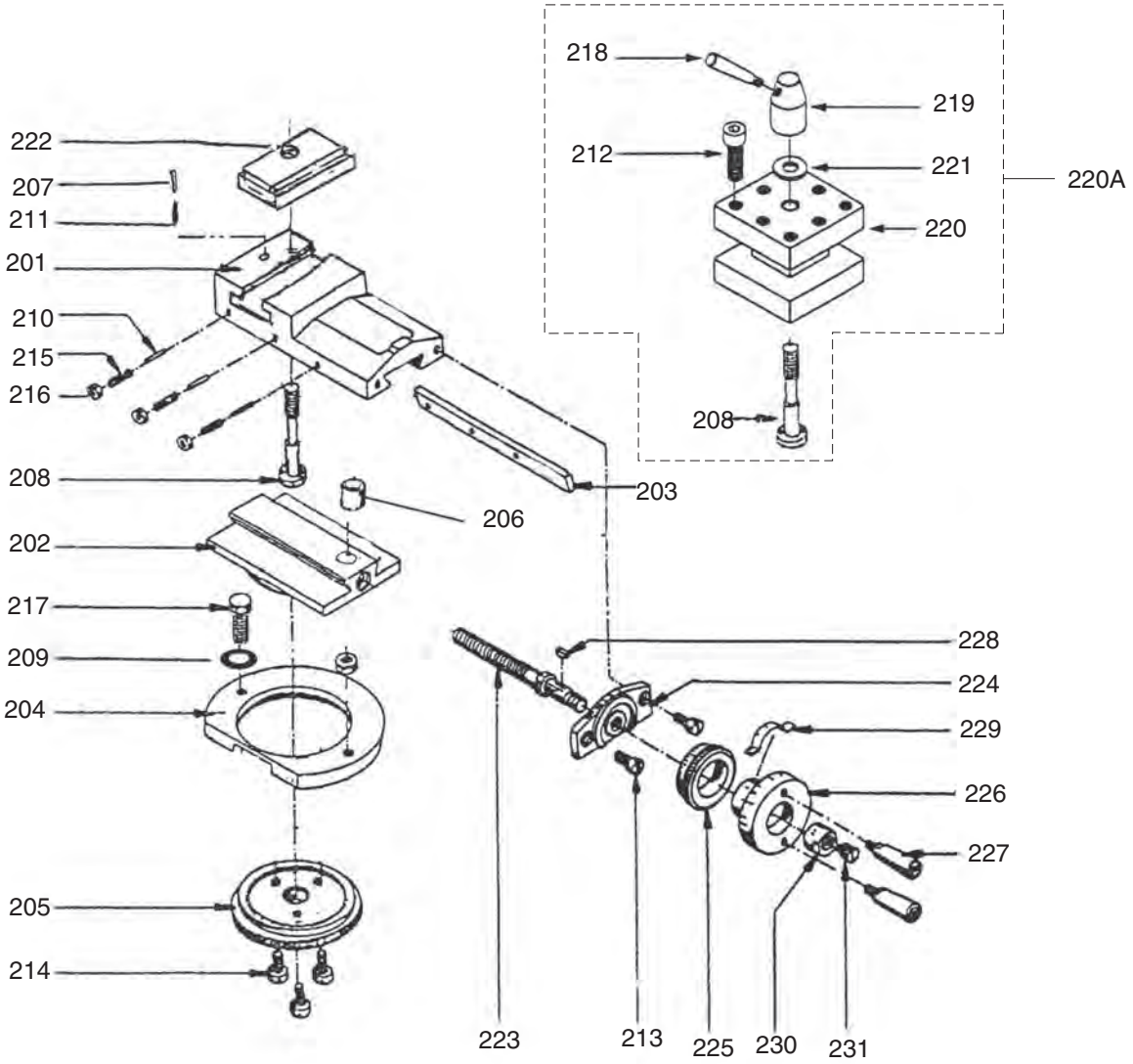

REF	PART #	DESCRIPTION
201	P0602201	COMPOUND REST
202	P0602202	SWIVEL BASE
203	P0602203	COMPOUND REST GIB
204	P0602204	CLAMPING RING
205	P0602205	GRADUATED DIAL
206	P0602206	BARREL NUT
207	P0602207	DOWEL PIN
208	P0602208	TOOL POST BOLT
209	PW01M	FLAT WASHER 8MM
210	P0602210	DOWEL PIN
211	P0602211	COMPRESSION SPRING
212	PCAP13M	CAP SCREW M8-1.25 X 30
213	PCAP31M	CAP SCREW M8-1.25 X 25
214	PCAP26M	CAP SCREW M6-1 X 12
215	PSS34M	SET SCREW M5-.8 X 16
216	PN06M	HEX NUT M5-.8

REF	PART #	DESCRIPTION
217	PB26M	HEX BOLT M8-1.25 X 30
218	P0602218	TOOL POST HANDLE
219	P0602219	TOOL POST HANDLE HUB
220A	P0602220A	4-WAY TOOL POST ASSEMBLY
220	P0602220	TOOL REST
221	P0602221	HUB SPACER
222	P0602222	TOOL REST SLIDE PLATE
223	P0602223	COMPOUND REST LEADSCREW
224	P0602224	LEADSCREW MOUNT
225	P0602225	GRADUATED DIAL
226	P0602226	COMPOUND REST HANDWHEEL
227	P0602227	COMPOUND HANDWHEEL HANDLE
228	PK03M	KEY 3 X 3 X 8
229	P0602229	POINTER
230	P0602230	THREADED COLLAR
231	PSS17M	SET SCREW M8-1.25 X 6

BUY PARTS ONLINE AT GRIZZLY.COM!
Scan QR code to visit our Parts Store.

Tailstock

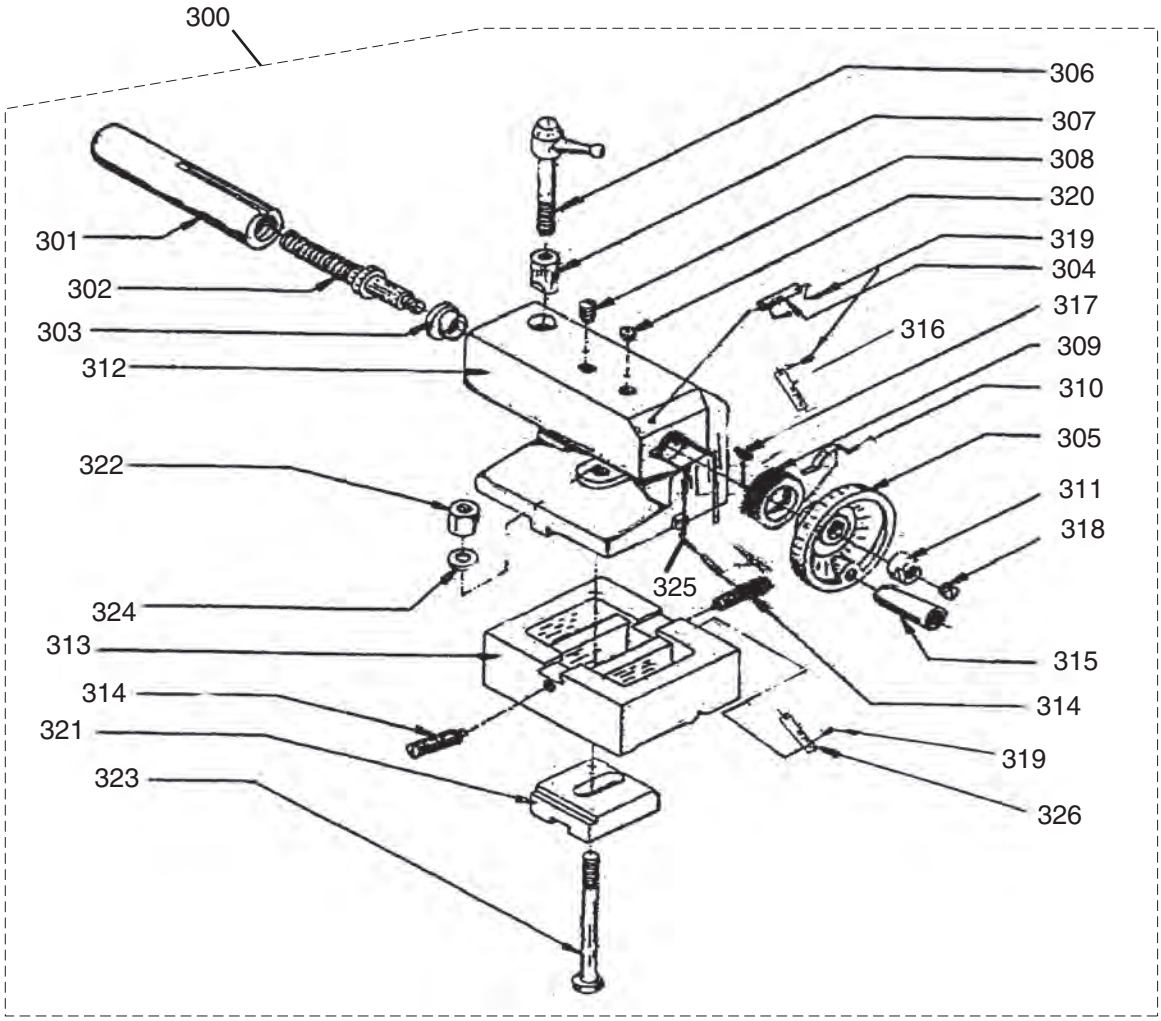

REF	PART #	DESCRIPTION
300	P0602300	COMPLETE TAILSTOCK ASSY
301	P0602301	TAILSTOCK QUILL
302	P0602302	TAILSTOCK LEADSCREW
303	P0602303	BUSHING
304	P0602304	HANDWHEEL SCALE PLATE
305	P0602305	TAILSTOCK HANDWHEEL
306	P0602306	LEVER BOLT M12-1.75 X 50
307	P0602307	BARREL NUT M12-1.75
308	P0602308	SET SCREW M6-1 X 12
309	P0602309	GRADUATED DIAL
310	P0602310	TAILSTOCK HANDWHEEL POINTER
311	P0602311	HANDWHEEL BUSHING
312	P0602312	TAILSTOCK BODY
313	P0602313	TAILSTOCK BASE

REF	PART #	DESCRIPTION
314	P0602314	SET SCREW M8-1.25 X 25
315	P0602315	TAILSTOCK HANDWHEEL HANDLE
316	P0602316	UPPER OFFSET PLATE
317	P0602317	KEY 3 X 3 X 10
318	P0602318	LOCK NUT M10-1.5
319	P0602319	RIVET 2 X 5MM STEEL FLUTED
320	P0602320	BALL OILER 6MM
321	P0602321	CLAMPING PLATE
322	P0602322	HEX NUT M12-1.75
323	P0602323	HEX BOLT M12-1.75 X 90
324	P0602324	FLAT WASHER 12MM
325	P0602325	SET SCREW M5-.8 X 6
326	P0602326	LOWER OFFSET PLATE

BUY PARTS ONLINE AT GRIZZLY.COM!
Scan QR code to visit our Parts Store.

Bed & Leadscrew

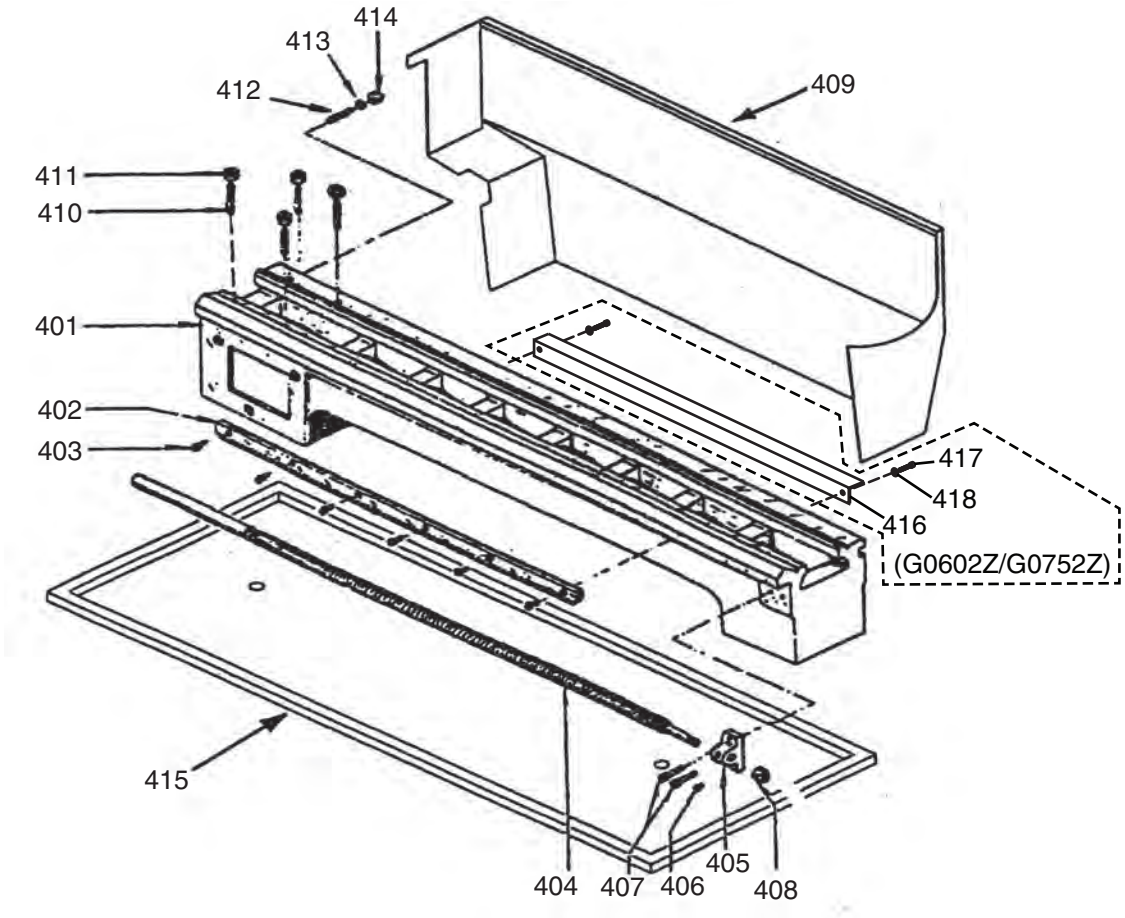

REF	PART #	DESCRIPTION
401	P0602401	BED (G0602/G0752)
401	P0602Z401	BED (G0602Z/G0752Z)
402	P0602402	RACK
403	P0602403	CAP SCREW M5-.8 X 12
404	P0602404	LONGITUDINAL LEADSCREW
405	P0602405	LEADSCREW END BRACKET
406	P0602406	BALL OILER 6MM
407	P0602407	CAP SCREW M6-1 X 20
408	P0602408	LOCK NUT M10-1.5
409	P0602409	BACK SPLASH

REF	PART #	DESCRIPTION
410	P0602410	STUD-SE M10-1.5 X 45, 35
411	P0602411	HEX NUT M10-1.5
412	P0602412	SET SCREW M8-1.25 X 40
413	P0602413	FLAT WASHER 8MM
414	P0602414	HEX NUT M8-1.25
415	P0602415	CHIP PAN
416	P0602Z416	Z-AXIS SENSOR BRACKET 31 X 31 X 600
417	P0602Z417	CAP SCREW M4-.7 X 10
418	P0602Z418	FLAT WASHER 4MM

BUY PARTS ONLINE AT GRIZZLY.COM!
Scan QR code to visit our Parts Store.

Steady Rest & Follow Rest

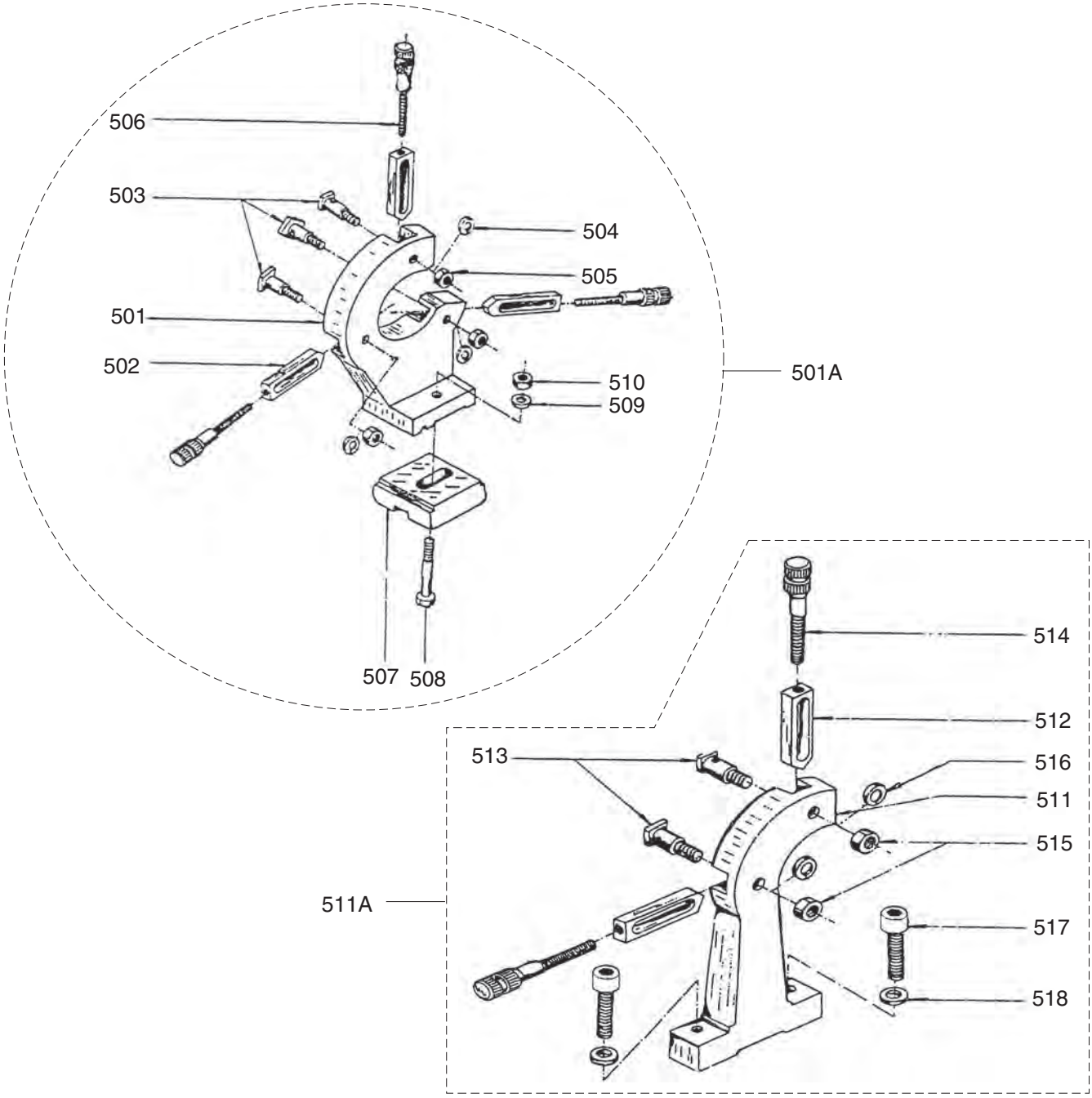

REF	PART #	DESCRIPTION
501A	P0602501A	STEADY REST ASSEMBLY
501	P0602501	STEADY REST CASTING
502	P0602502	FINGER
503	P0602503	SHOULDER T-BOLT
504	PLW03M	LOCK WASHER 6MM
505	PN01M	HEX NUT M6-1
506	P0602506	ADJUSTING SCREW
507	P0602507	CLAMPING PLATE
508	PB125M	HEX BOLT M12-1.75 X 65
509	PW06M	FLAT WASHER 12MM

REF	PART #	DESCRIPTION
510	PN09M	HEX NUT M12-1.75
511A	P0602511A	FOLLOW REST ASSEMBLY
511	P0602511	FOLLOW REST CASTING
512	P0602502	FINGER
513	P0602503	SHOULDER T-BOLT
514	P0602506	ADJUSTING SCREW
515	PN01M	HEX NUT M6-1
516	PLW03M	LOCK WASHER 6MM
517	PCAP40M	CAP SCREW M8-1.25 X 35
518	PW01M	FLAT WASHER 8MM

BUY PARTS ONLINE AT GRIZZLY.COM!
Scan QR code to visit our Parts Store.

G0602/G0602Z Motor & Electrical

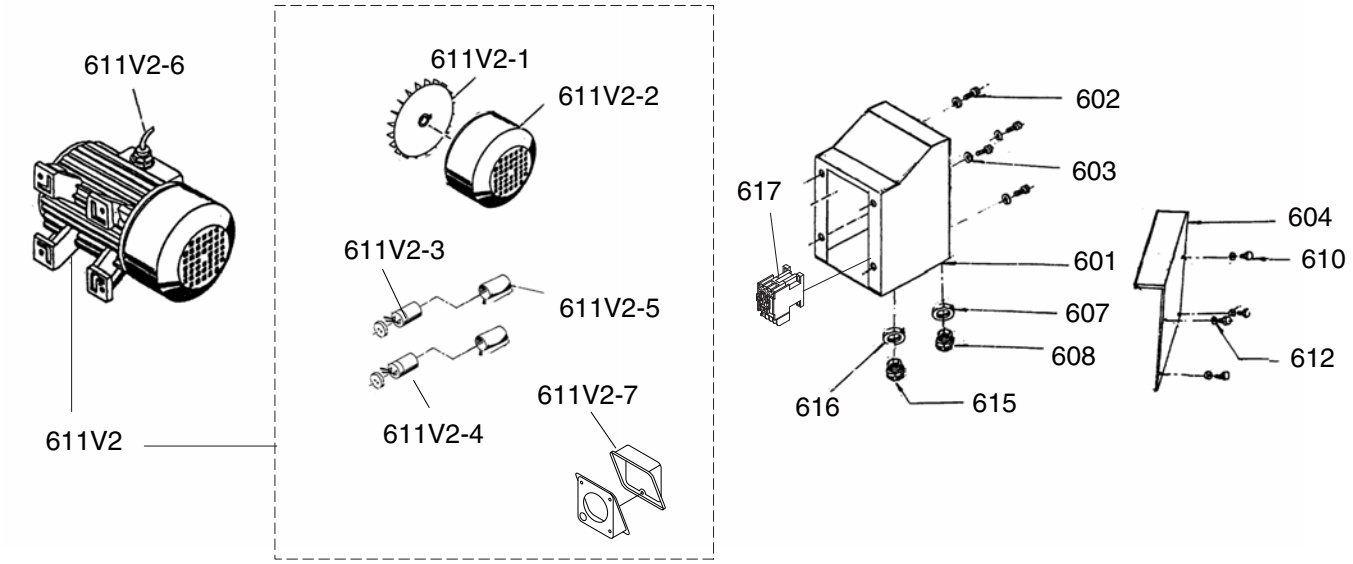

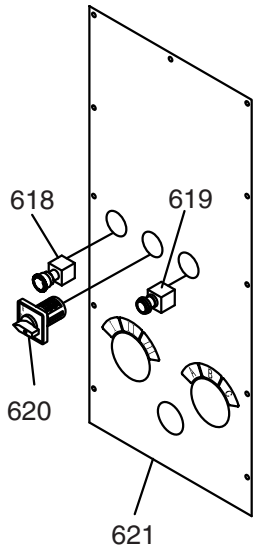

REF	PART #	DESCRIPTION
601	P0602601	ELECTRICAL CABINET
602	PCAP06M	CAP SCREW M6-1 X 25
603	PLW03M	LOCK WASHER 6MM
604	P0602604	ELECTRICAL CABINET COVER
607	P0602607	STRAIN RELIEF NUT
608	P0602608	STRAIN RELIEF M25-1.5
610	PS17M	PHLP HD SCR M4-.7 X 6
611V2	P0602611V2	MOTOR 1HP 110V 1-PH ALUM BDY V2.09.08
611V2-1	P0602611V2-1	MOTOR FAN
611V2-2	P0602611V2-2	MOTOR FAN COVER
611V2-3	PC150	S CAPACITOR 150M 125V
611V2-4	P0602611V2-4	R CAPACITOR 20M 400V

REF	PART #	DESCRIPTION
611V2-5	P0602611V2-5	CAPACITOR COVER
611V2-6	P0602611V2-6	POWER CORD 14G 3W 60" 5-15P
611V2-7	P0602611V2-7	MOTOR JUNCTION BOX
612	PW05M	FLAT WASHER 4MM
615	P0602615	STRAIN RELIEF M20-1.5
616	P0602616	STRAIN RELIEF NUT
617	P0602617	CONTACTOR SIEMENS 3TB41 22E 110V
618	P0602618	E-STOP BUTTON MINGER LA125H-BE102C
619	P0602619	ON PUSH BUTTON MINGER LA125H-BE101C
620	P0602620	ROTARY SWITCH CANSEN LW26-20 M09T/3
621	P0602621	G0602 CONTROL PANEL

BUY PARTS ONLINE AT GRIZZLY.COM!
Scan QR code to visit our Parts Store.

G0752/G0752Z Motor & Electrical

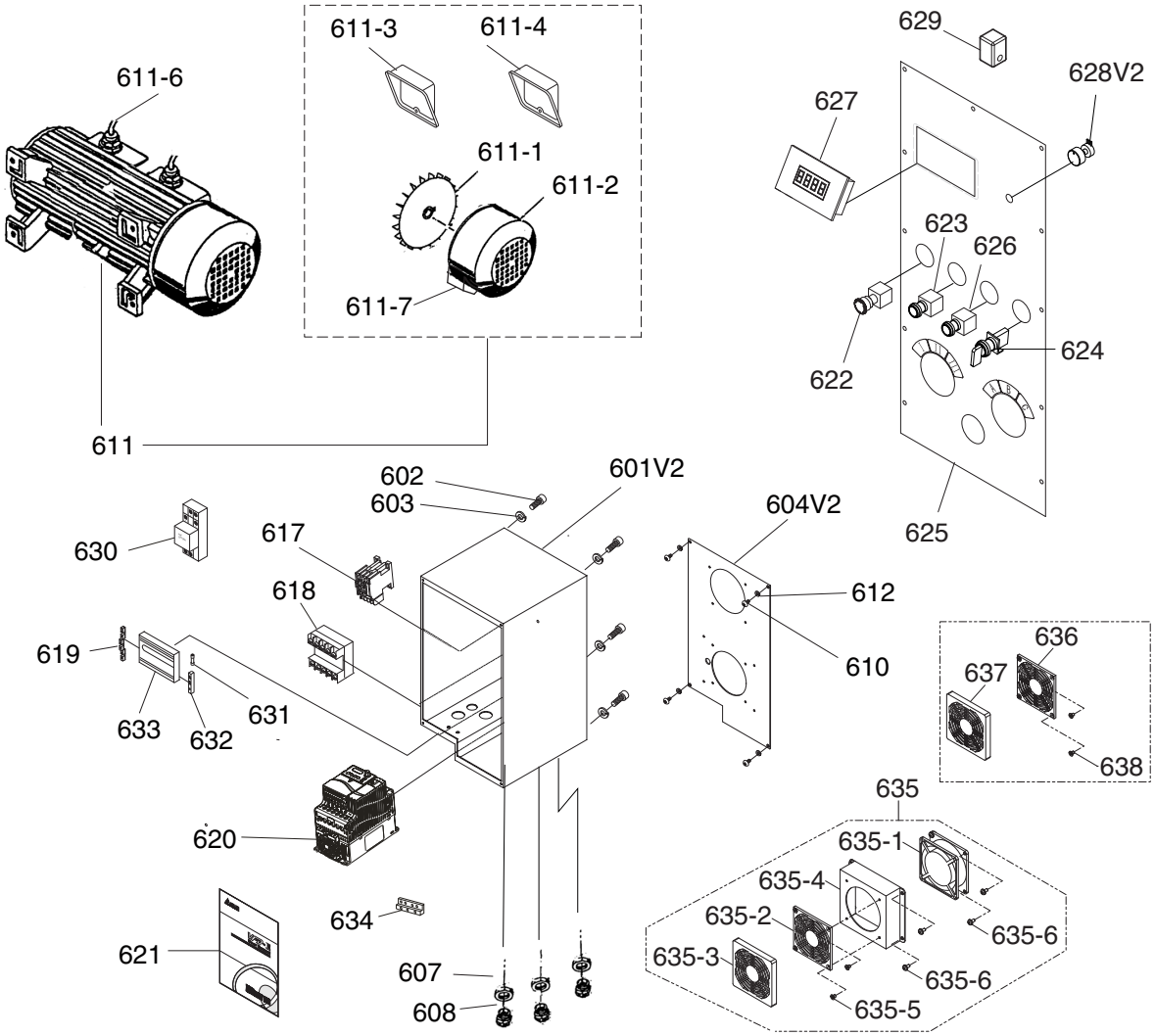

REF	PART #	DESCRIPTION
601V2	P0752601V2	ELECTRICAL CABINET V2.10.18
602	P0752602	CAP SCREW M6-1 X 25
603	P0752603	LOCK WASHER 6MM
604V2	P0752604V2	ELECTRICAL CABINET COVER V2.10.18
607	P0752607	STRAIN RELIEF NUT
608	P0752608	STRAIN RELIEF M25-1.5
610	P0752610	PHLP HD SCR M4-.7 X 6
611	P0752611	MOTOR 1HP 220V 3-PH
611-1	P0752611-1	MOTOR FAN
611-2	P0752611-2	MOTOR FAN COVER
611-3	P0752611-3	RIGHT MOTOR JUNCTION BOX COVER
611-4	P0752611-4	LEFT MOTOR JUNCTION BOX COVER
611-6	P0752611-6	POWER CORD 16G 3W 60" 5-15P
611-7	P0752611-7	FAN MOTOR
612	P0752612	FLAT WASHER 4MM
617	P0752617	CONTACTOR SIEMENS 3TB41 22E 24V
618	P0752618	TRANSFORMER BAEEC JBK5-40VA
619	P0752619	TERMINAL POST
620	P0752620	INVERTER (VFD) DELTA VFD007E11A
621	P0752621	VFD-E USER MANUAL
622	P0752622	E-STOP BUTTON MINGER LA125H-BE101C-102C
623	P0752623	ON PUSH BUTTON MINGER LA125H-BE102C

REF	PART #	DESCRIPTION
624	P0752624	SPINDLE DIRECTION SWITCH LA125H-BE102C
625	P0752625	CONTROL PANEL PLATE (G0752)
625	P0752Z625	CONTROL PANEL PLATE (G0752Z)
626	P0752626	OFF PUSH BUTTON MINGER LA125H-BE101C
627	P0752627	RPM DISPLAY UNIT
628V2	P0752628V2	POTENTIOMETER WXD3-13 V2.03.17
629	P0752629	SPINDLE SPEED SENSOR
630	P0752630	RELAY OMRON MY2N-J 220V
631	P0752631	FUSE 2A 250V
632	P0752632	FUSE HOLDER
633	P0752633	TERMINAL POST MOUNTING BRACKET
634	P0752634	GROUNDING BAR
635	P0752635	COOLING FAN ASSEMBLY
635-1	P0752635-1	FAN SHENZEN SF8025AT 110/120V 0.14A
635-2	P0752635-2	DUST COVER MOUNTING PLATE
635-3	P0752635-3	DUST COVER MOUNTING PLATE
635-4	P0752635-4	FAN HOUSING
635-5	P0752635-5	FLAT HD SCR M4-.7 X 6
635-6	P0752635-6	PHLP HD SCR M4-.7 X 6
636	P0752636	DUST COVER MOUNTING PLATE
637	P0752637	DUST COVER
638	P0752638	FLAT HD SCR M4-.7 X 6

BUY PARTS ONLINE AT GRIZZLY.COM!
Scan QR code to visit our Parts Store.

Change Gears

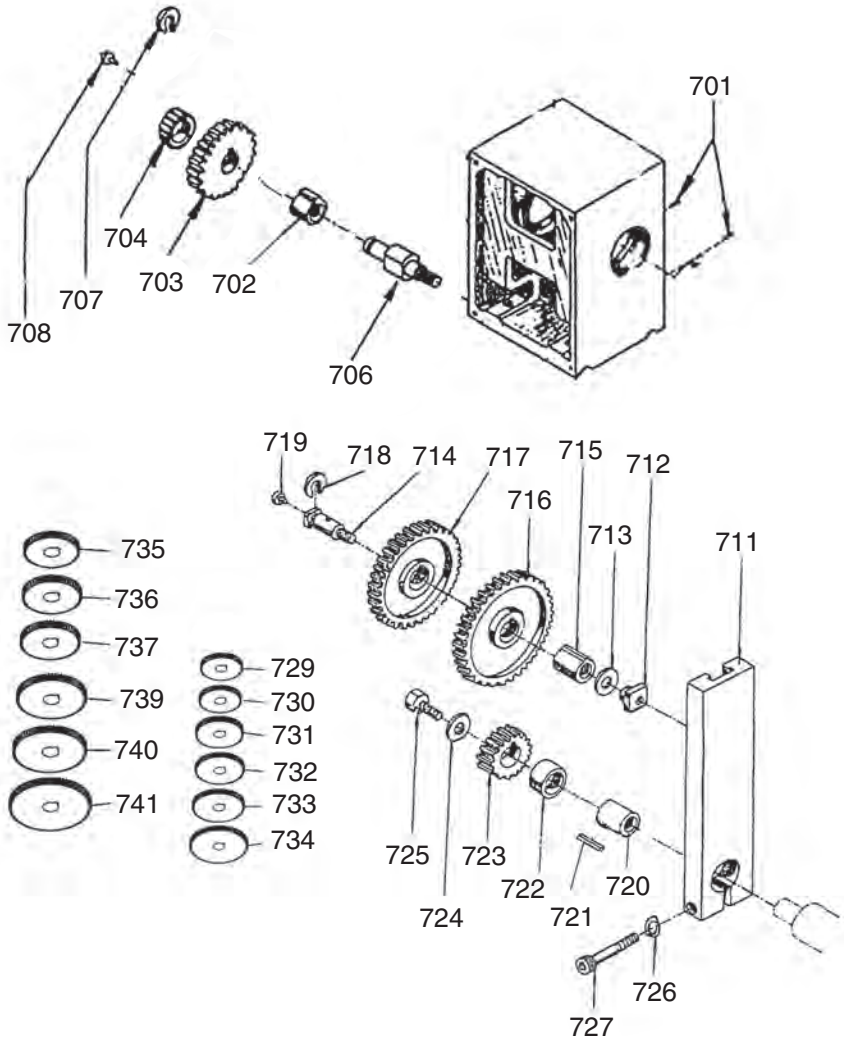

REF	PART #	DESCRIPTION
701	PSS01M	SET SCREW M6-1 X 10
702	P0602715	KEYED BUSHING
703	P0602703	GEAR 60T PLASTIC
704	P0602704	GEAR 27T CAST-IRON
706	P0602706	GEAR SHAFT
707	PEC10M	E-CLIP 9MM
708	P0602708	BALL OILER 6MM
711	P0602711	BRACKET
712	P0602712	T-NUT
713	P0602713	SPACER WASHER
714	P0602714	GEAR SHAFT
715	P0602715	KEYED BUSHING
716	P0602716	GEAR 127T
717	P0602717	GEAR 56T
718	P0602718	GEAR SHAFT CLIP
719	P0602708	BALL OILER 6MM
720	P0602720	BUSHING
721	PK97M	KEY 4 X 4 X 14
722	P0602722	SPACER RING

REF	PART #	DESCRIPTION
723	P0602723	GEAR 104T
724	PW03M	FLAT WASHER 6MM
725	PCAP85M	CAP SCREW M6-1 X 6
726	PLW04M	LOCK WASHER 8MM
727	PCAP12M	CAP SCREW M8-1.25 X 40
729	P0602729	GEAR 36T
730	P0602730	GEAR 40T
731	P0602731	GEAR 44T
732	P0602732	GEAR 46T
733	P0602733	GEAR 48T
734	P0602734	GEAR 52T
735	P0602735	GEAR 45T
736	P0602736	GEAR 56T
737	P0602737	GEAR 60T
738	P0602703	GEAR 60T PLASTIC
739	P0602739	GEAR 104T
740	P0602740	GEAR 120T
741	P0602741	GEAR 127T

BUY PARTS ONLINE AT GRIZZLY.COM!
Scan QR code to visit our Parts Store.

Gearbox

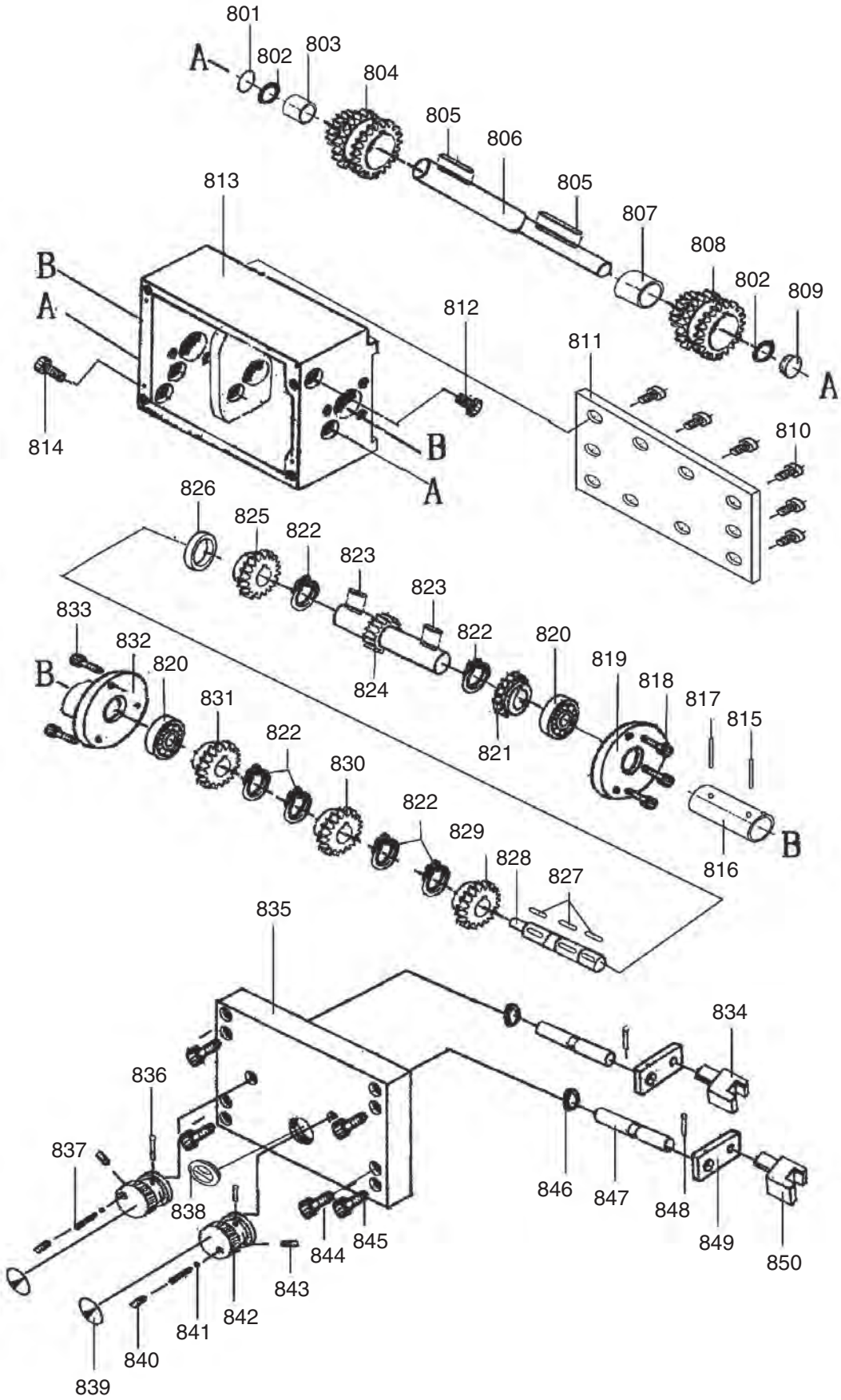

BUY PARTS ONLINE AT GRIZZLY.COM!
Scan QR code to visit our Parts Store.

Gearbox Parts List

REF	PART #	DESCRIPTION
801	P0602801	PLUG
802	P0602802	O-RING
803	P0602803	BUSHING
804	P0602804	CLUSTER GEAR 30/36/33T
805	PK133M	KEY 4 X 4 X 50
806	P0602806	GEAR SHAFT
807	P0602807	BUSHING
808	P0602808	CLUSTER GEAR 22/44/33T
809	P0602809	CLUSTER GEAR PLUG
810	PCAP50M	CAP SCREW M5-.8 X 10
811	P0602811	REAR GEARBOX COVER
812	P0602812	FILL PLUG 3/8" NPT
813	P0602813	GEAR BOX CASE
814	P0602814	DRAIN PLUG 3/8" NPT
815	P0602815	SHEAR PIN 5 X 20
816	P0602816	LEADSCREW CONNECTING COLLAR
817	P0602817	SHEAR PIN 5 X 20
818	PCAP26M	CAP SCREW M6-1 X 12
819	P0602819	FLANGE
820	P6202-OPEN	BALL BEARING 6202-OPEN
821	P0602821	GEAR 33T
822	PR05M	EXT RETAINING RING 15MM
823	PK65M	KEY 4 X 4 X 8
824	P0602824	GEAR SHAFT 22T
825	P0602825	GEAR 44T

REF	PART #	DESCRIPTION
826	P0602826	COLLAR
827	PK132M	KEY 4 X 4 X10
828	P0602828	GEAR SHAFT
829	P0602829	GEAR 33T
830	P0602830	GEAR 30T
831	P0602831	GEAR 35T
832	P0602832	FLANGE
833	PCAP01M	CAP SCREW M6-1 X 16
834	P0602834	SHIFT FORK
835	P0602835	FRONT GEARBOX COVER
836	PRP05M	ROLL PIN 5 X 30
837	P0602837	COMPRESSION SPRING
838	P0602838	SIGHT GLASS A16
839	P0602839	POINTER DISC
840	PSS01M	SET SCREW M6-1 X 10
841	PSTB004M	STEEL BALL 5MM
842	P0602842	SHIFT HUB
843	PSS01M	SET SCREW M6-1 X 10
844	PCAP37M	CAP SCREW M6-1 X 50
845	PCAP02M	CAP SCREW M6-1 X 20
846	P0602846	O-RING 1.8 X 6.7
847	P0602847	SHAFT
848	PRP03M	ROLL PIN 5 X 20
849	P0602849	SHIFT LEVER
850	P0602850	SHIFT FORK

BUY PARTS ONLINE AT GRIZZLY.COM!
Scan QR code to visit our Parts Store.

G0602/G0752 Unique Parts

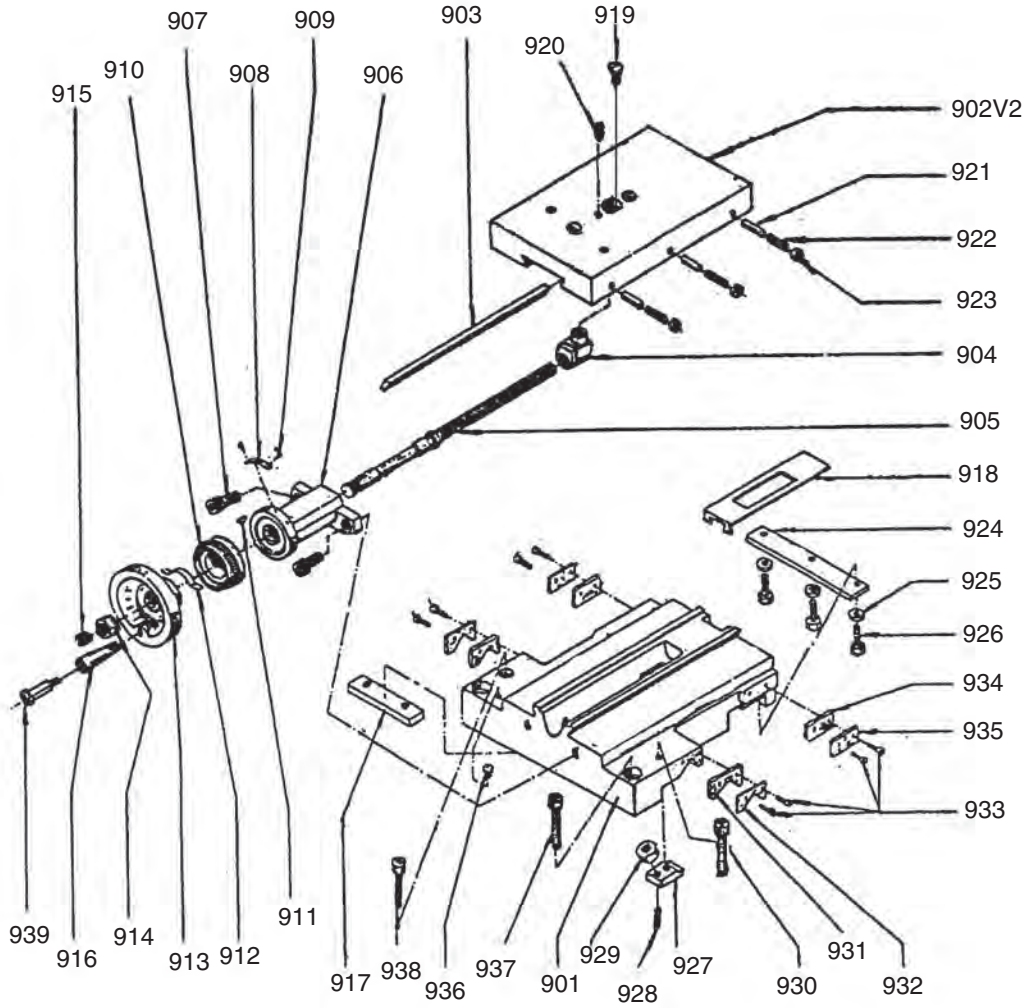

REF	PART #	DESCRIPTION
901	P0602901	SADDLE
902V2	P0602902V2	CROSS SLIDE W/O T-SLOTS V2.08.07
903	P0602903	CROSS SLIDE GIB
904	P0602904	CROSS SLIDE LEADSCREW NUT
905	P0602905	CROSS SLIDE LEADSCREW
906	P0602906	LEADSCREW BRACKET
907	P0602907	CAP SCREW M8-1.25 X 25
908	P0602908	INDICATOR PLATE
909	P0602909	RIVET 2 X 5MM STEEL FLUTED
910	P0602910	GRADUATED DIAL
911	P0602911	KEY 3 X 3 X 6
912	P0602912	SPRING PLATE
913	P0602913	CROSS SLIDE HANDWHEEL
914	P0602914	HANDWHEEL HEX NUT
915	P0602915	SET SCREW M8-1.25 X 6
916	P0602916	CROSS SLIDE HANDWHEEL HANDLE
917	P0602917	SLIDE BLOCK
918	P0602918	CHIP GUARD
919	P0602919	CAP SCREW M6-1 X 12
920	P0602920	SET SCREW M6-1 X 16

REF	PART #	DESCRIPTION
921	P0602921	DOWEL PIN
922	P0602922	SET SCREW M5-.8 X 16
923	P0602923	HEX NUT M5-.8
924	P0602924	SADDLE TENSION BAR
925	P0602925	FLAT WASHER 6MM
926	P0602926	CAP SCREW M6-1 X 16
927	P0602927	SADDLE CLAMP PLATE
928	P0602928	SET SCREW M6-1 X 20
929	P0602929	HEX NUT M6-1
930	P0602930	CAP SCREW M6-1 X 35
931	P0602931	V-WAY WIPER
932	P0602932	V-WAY WIPER COVER
933	P0602933	PHLP HD SCR M4-.7 X 8
934	P0602934	STRAIGHT WAY WIPER
935	P0602935	STRAIGHT WAY WIPER COVER
936	P0602936	BALL OILER 8MM
937	P0602937	CAP SCREW M8-1.25 X 35
938	P0602938	CAP SCREW M6-1 X 35
939	P0602939	HANDLE SCREW

BUY PARTS ONLINE AT GRIZZLY.COM!
Scan QR code to visit our Parts Store.

G0602Z/G0752Z Cross Slide & Carriage

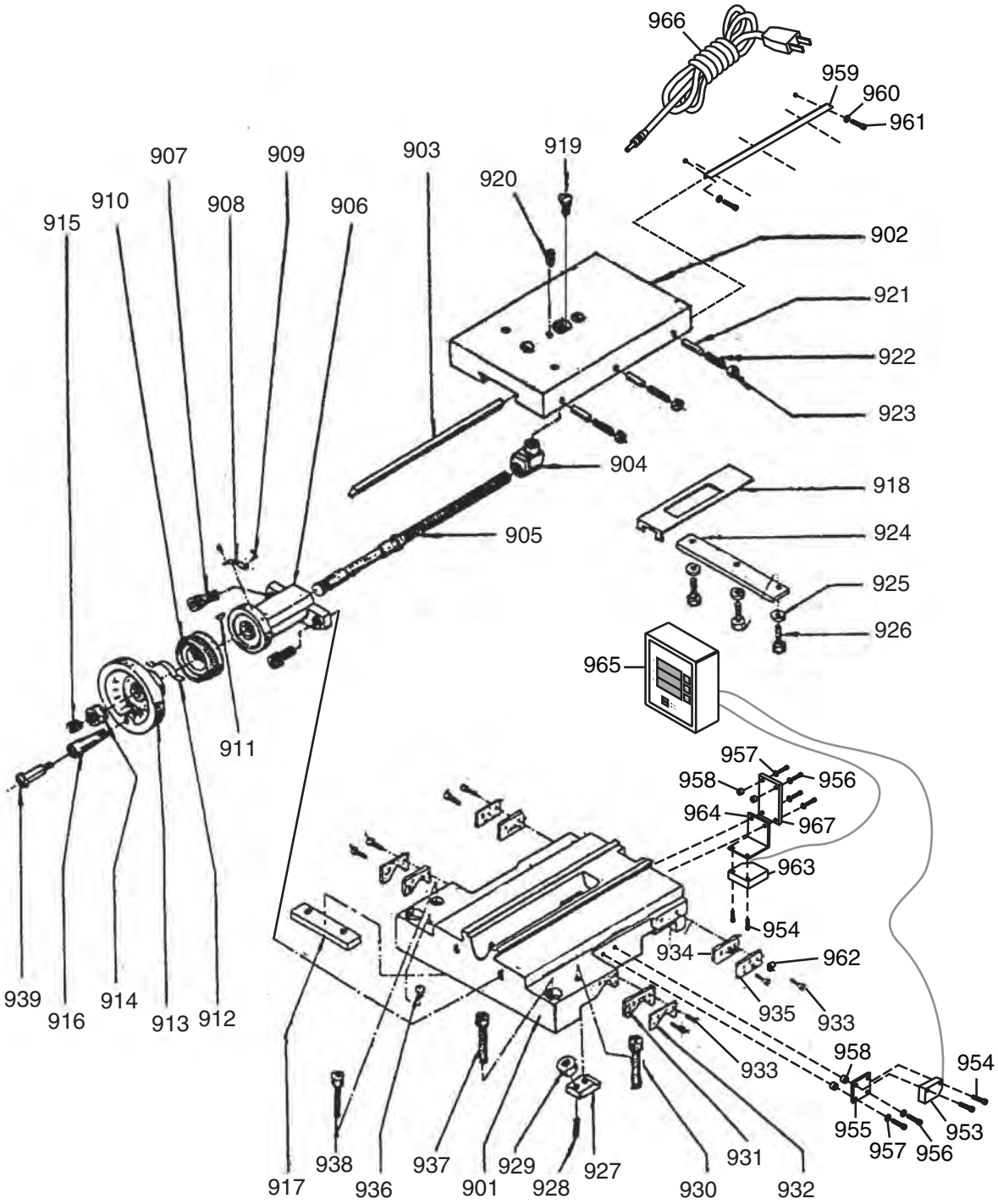

BUY PARTS ONLINE AT GRIZZLY.COM!
Scan QR code to visit our Parts Store.

G0602Z/G0752Z Cross Slide & Carriage Parts List

REF	PART #	DESCRIPTION
901	P0602Z901	SADDLE
902	P0602Z902	CROSS SLIDE
903	P0602Z903	CROSS SLIDE GIB
904	P0602Z904	CROSS SLIDE LEADSCREW NUT
905	P0602Z905	CROSS SLIDE LEADSCREW
906	P0602Z906	LEADSCREW BRACKET
907	P0602Z907	CAP SCREW M8-1.25 X 25
908	P0602Z908	INDICATOR PLATE
909	P0602Z909	RIVET 2 X 5MM STEEL FLUTED
910	P0602Z910	GRADUATED DIAL
911	P0602Z911	KEY 3 X 3 X 6
912	P0602Z912	SPRING PLATE
913	P0602Z913	CROSS SLIDE HANDWHEEL
914	P0602Z914	HANDWHEEL HEX NUT
915	P0602Z915	SET SCREW M8-1.25 X 6
916	P0602Z916	CROSS SLIDE HANDWHEEL HANDLE
917	P0602Z917	SLIDE BLOCK
918	P0602Z918	CHIP GUARD
919	P0602Z919	CAP SCREW M6-1 X 12
920	P0602Z920	SET SCREW M6-1 X 16
921	P0602Z921	DOWEL PIN
922	P0602Z922	SET SCREW M5-.8 X 16
923	P0602Z923	HEX NUT M5-.8
924	P0602Z924	SADDLE TENSION BAR
925	P0602Z925	FLAT WASHER 6MM
926	P0602Z926	CAP SCREW M6-1 X 16
927	P0602Z927	SADDLE CLAMP PLATE

REF	PART #	DESCRIPTION
928	P0602Z928	SET SCREW M6-1 X 20
929	P0602Z929	HEX NUT M6-1
930	P0602Z930	CAP SCREW M6-1 X 35
931	P0602Z931	V-WAY WIPER
932	P0602Z932	V-WAY WIPER COVER
933	P0602Z933	PHLP HD SCR M4-.7 X 8
934	P0602Z934	STRAIGHT WAY WIPER
935	P0602Z935	STRAIGHT WAY WIPER COVER
936	P0602Z936	BALL OILER 8MM
937	P0602Z937	CAP SCREW M8-1.25 X 35
938	P0602Z938	CAP SCREW M6-1 X 35
939	P0602Z939	HANDLE SCREW
953	P0602Z953	X-AXIS SENSOR
954	P0602Z954	CAP SCREW M3-.5 X 16
955	P0602Z955	X-AXIS SENSOR MOUNTING PLATE
956	P0602Z956	CAP SCREW M4-.7 X 10
957	P0602Z957	FLAT WASHER 4MM
958	P0602Z958	PLASTIC SLEEVE 6 X 7 X 3D
959	P0602Z959	X-AXIS SENSOR BRACKET 10 X 30 X 215
960	P0602Z960	FLAT WASHER 3MM
961	P0602Z961	CAP SCREW M3-.5 X 6
962	P0602Z962	WIRE RETAINING RING 4MM
963	P0602Z963	Z-AXIS SENSOR
964	P0602Z964	Z-AXIS SENSOR MOUNTING PLATE
965	P0602Z965	DIGITAL READOUT DISPLAY UNIT
966	P0602Z966	DRO POWER CORD 2W 18G 72" 1-15P
967	P0602Z967	Z-AXIS SENSOR CONNECTING PLATE

BUY PARTS ONLINE AT GRIZZLY.COM!
Scan QR code to visit our Parts Store.

G0602/G0602Z Labels & Cosmetics

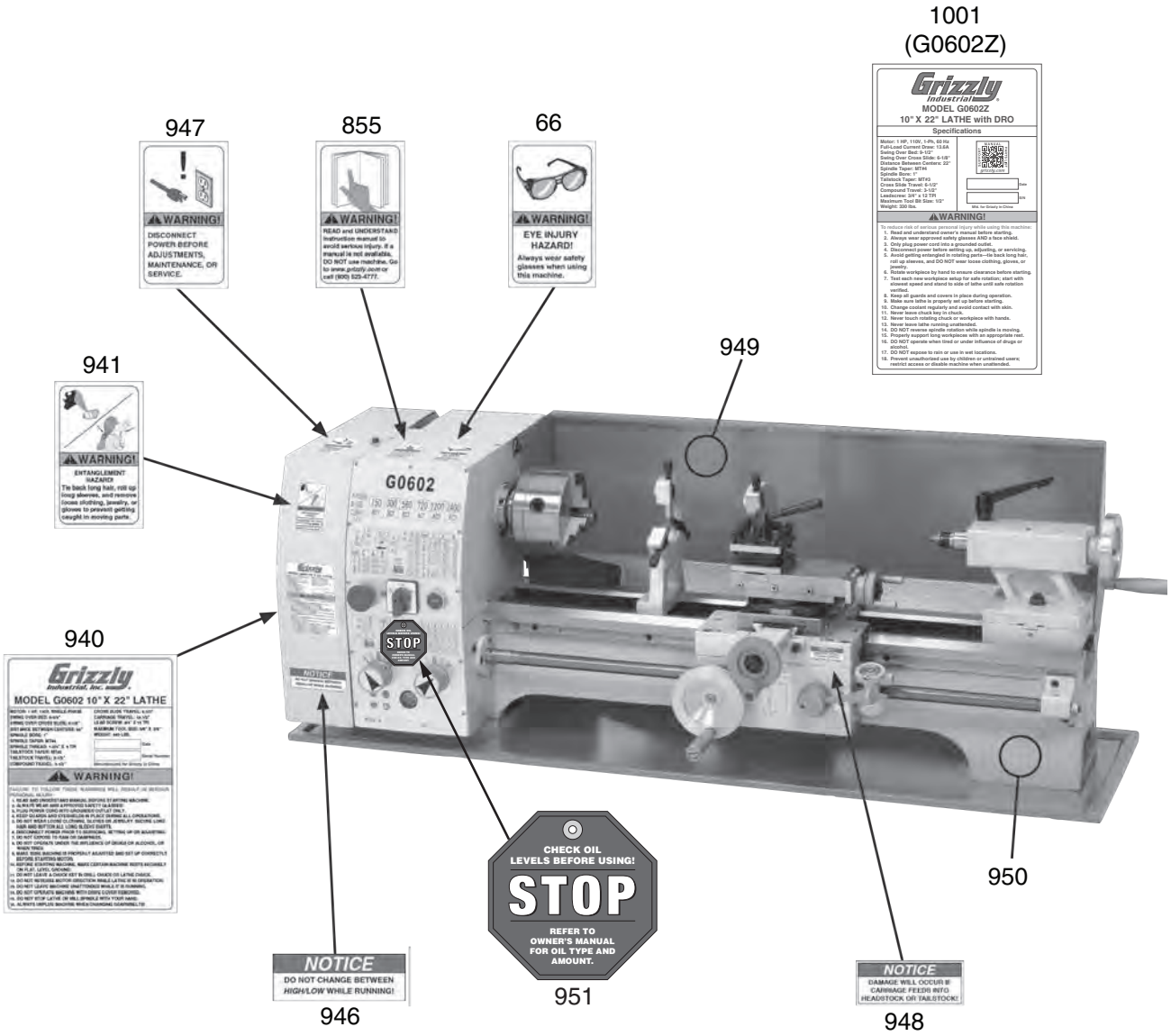

REF	PART #	DESCRIPTION
66	P0602066	SAFETY GLASSES LABEL ALUMINUM
855	P0602855	READ MANUAL LABEL ALUMINUM
940	P0602940	MACHINE ID LABEL ALUMINUM
941	P0602941	ENTANGLEMENT LABEL ALUMINUM
946	P0602946	SHIFT NOTICE LABEL ALUMINUM
947	P0602947	DISCONNECT POWER LABEL ALUM

REF	PART #	DESCRIPTION
948	P0602948	CARRIAGE FEED DAMAGE LABEL ALUM
949	P0602949	GRIZZLY TOUCH-UP PAINT
950	P0602950	PUTTY TOUCH-UP PAINT
951	P0602951	STOP OIL FILL TAG
1001	P0602Z1001	MACHINE ID LABEL

⚠WARNING

Safety labels help reduce the risk of serious injury caused by machine hazards. If any label comes off or becomes unreadable, the owner of this machine MUST replace it in the original location before resuming operations. For replacements, contact (800) 523-4777 or www.grizzly.com.

BUY PARTS ONLINE AT GRIZZLY.COM!
Scan QR code to visit our Parts Store.

G0752/G0752Z Labels & Cosmetic

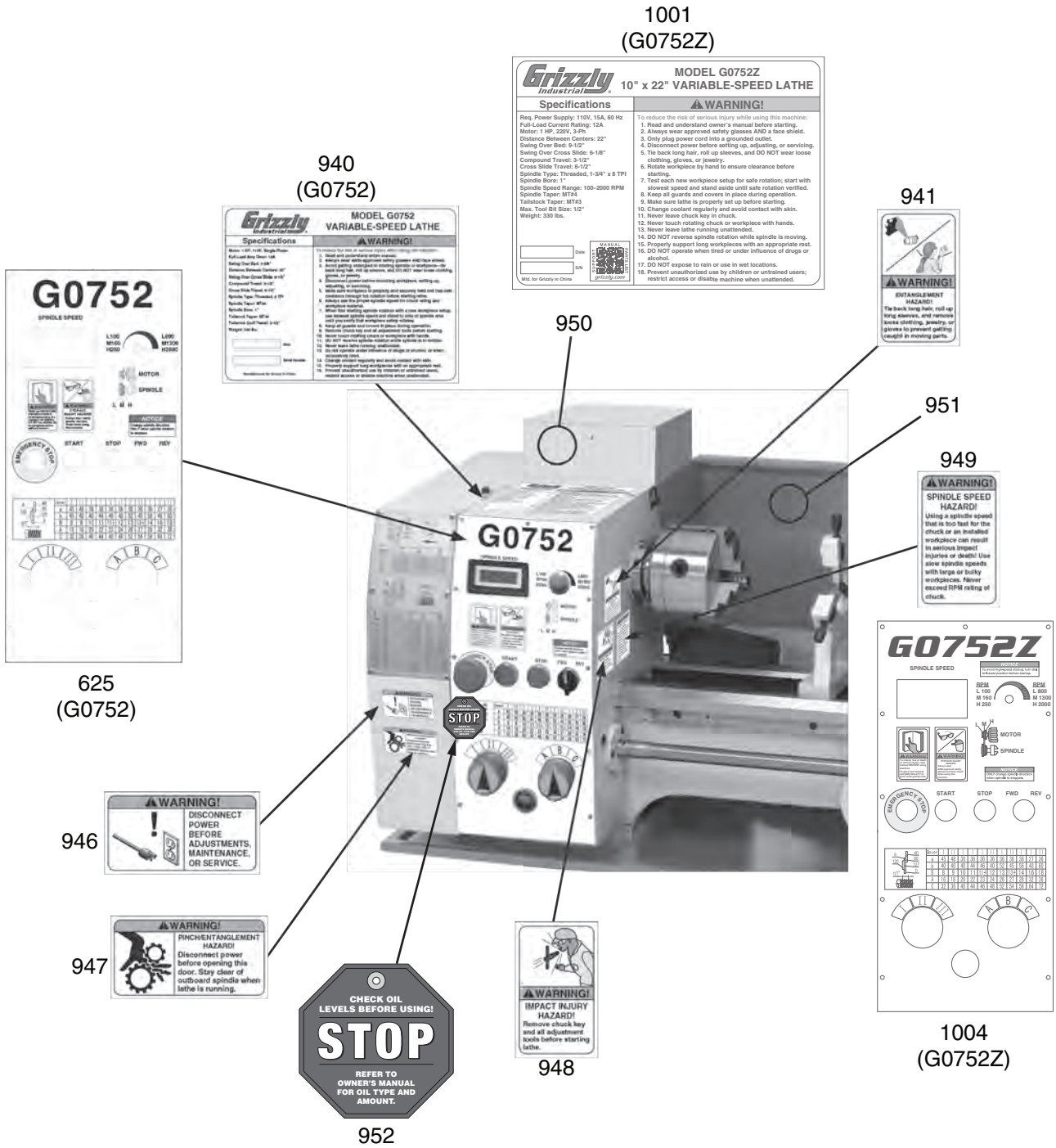

REF	PART #	DESCRIPTION
625	P0752625	G0752 CONTROL PANEL
940	P0752940	G0752 MACHINE ID LABEL
941	P0752941	ENTANGLEMENT LABEL
946	P0752946	DISCONNECT POWER LABEL
947	P0752947	ENTANTANGLEMENT-GEARS LABEL
948	P0752948	IMPACT INJURY HAZARD LABEL

REF	PART #	DESCRIPTION
949	P0752949	SPINDLE SPEED HAZARD LABEL
950	P0752950	PUTTY TOUCH-UP PAINT
951	P0752951	GRIZZLY GREEN TOUCH-UP PAINT
952	P0752952	STOP OIL FILL TAG
1001	P0752Z1001	G0752Z MACHINE ID LABEL
1004	P0752Z1004	G0752Z CONTROL PANEL

BUY PARTS ONLINE AT GRIZZLY.COM!
Scan QR code to visit our Parts Store.