MODEL SB1012F
14" X 40" LATHE w/DRO
Manual Insert

PHONE: (360) 734-1540 • www.southbendlathe.com

The Model SB1012F Lathe is the same machine as the Model SB1012 except for the following:

- Addition of 2-Axis Fagor Digital Readout (DRO).

Except for the differences noted in this insert, all other content in the Model SB1012 Owner's Manual applies to this machine. Before operating your new lathe, you MUST read and understand this insert, the entire Model SB1012 Owner's Manual, and the Fagor DRO Owner's Manual to reduce the risk of injury when using this machine. Keep this insert for later reference.

If you have any further questions about this manual insert or the differences between the Model SB1012F and the Model SB1012, contact our Technical Support at (360) 734-1639 or email sales@southbendlathe.com.

New & Changed Parts

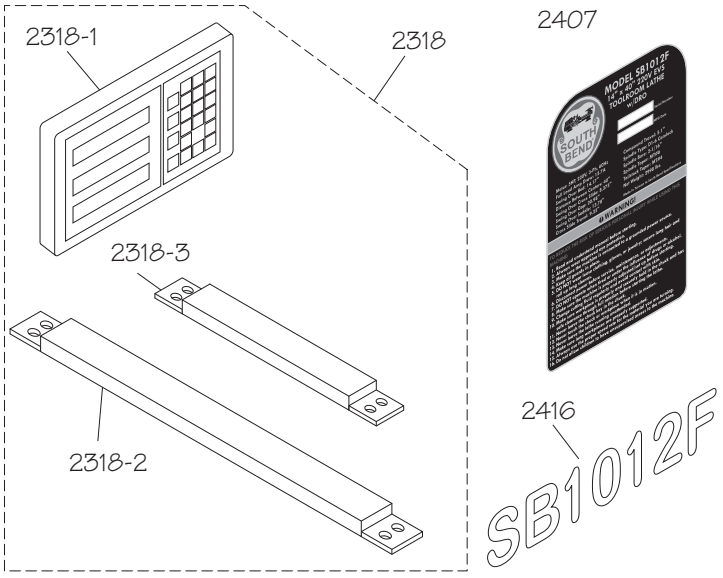

REF	PART #	DESCRIPTION
2318	PSB1012F2318	DRO ASSEMBLY FAGOR 2-AXIS
2318-1	PSB1012F2318-1	DRO DISPLAY FAGOR 20-iT
2318-2	PSB1012F2318-2	DRO X-AXIS SCALE FAGOR MKT- 154
2318-3	PSB1012F2318-3	DRO Y-AXIS SCALE FAGOR MKT-27

REF	PART #	DESCRIPTION
2407	PSB1012F2407	MACHINE ID LABEL
2416	PSB1012F2416	MODEL NUMBER LABEL
MAN	PSB1012FMAN	MANUAL SB1012F MFG 01/12 V1.10.12

Copyright © October, 2012 by South Bend Lathe Co.
WARNING: No portion of this manual may be reproduced without written approval.
#TS15395 Printed in USA

P.O. Box 2027, Bellingham, WA 98227 U.S.A.
PHONE: (360) 734-1540 • © South Bend Lathe Co.
www.southbendlathe.com

Product Specifications

Model SB1012F
South Bend 14" x 40" Lathe with DRO

Product Dimensions

Weight	1808 lbs.
Width (side-to-side) x Depth (front-to-back) x Height	91-1/2 x 39-1/2 x 59 in.
Footprint (Length x Width)	82 x 19-1/2 in.

Shipping Dimensions

Type	Wood Slat Crate
Content	Machine
Weight	2984 lbs.
Length x Width x Height	90 x 42 x 75 in.
Must Ship Upright	N/A

Electrical

Power Requirement	220V, 3-Phase, 60 Hz
Prewired Voltage	220V
Full-Load Current Rating	15.7A
Minimum Circuit Size	20A
Inverter Type	Yaskawa G7A23P7
Switch	Control Panel w/Magnetic Switch Protection
Recommended Power Cord	12 Gauge, 4 Wire, 300VAC
Plug Included	No
Recommended Plug/Outlet Type	NEMA 15-20

Motors

Oil Pump

Type	TEFC Induction
Horsepower	1/4 HP
Phase	3-Phase
Amps	1.4A
Speed	1725 RPM
Power Transfer	Direct Drive
Bearings	Shielded & Permanently Lubricated

Main

Type	TEFC Induction
Horsepower	5 HP
Phase	3-Phase
Amps	14A
Speed	3450 RPM
Power Transfer	V-Belt Drive
Bearings	Shielded & Permanently Lubricated

Coolant Pump

Type	TEFC Induction (Class F)
Horsepower	1/8 HP
Phase	3-Phase
Amps	0.3A
Speed	3450 RPM
Power Transfer	Direct Drive
Bearings	Shielded & Permanently Lubricated

Main Specifications

Operation Info

Swing Over Bed	14.17 in.
Distance Between Centers	40 in.
Swing Over Cross Slide	8.375 in.
Swing Over Saddle	13.78 in.
Swing Over Gap	20.98 in.
Maximum Tool Bit Size	3/4 in.
Compound Travel	5.1 in.
Carriage Travel	38.58 in.
Cross Slide Travel	9-1/4 in.

Headstock Info

Spindle Bore	2.0625 in.
Spindle Taper	MT#6
Number of Spindle Speeds	Variable
Spindle Speeds	20 – 2500 RPM
Spindle Type	D1-6 Camlock
Spindle Bearings	NSK or NTN Tapered Roller
Spindle Length	24.24 in.
Spindle Length with 3-Jaw Chuck	28.74 in.
Spindle Length with 4-Jaw Chuck	34.08 in.

Tailstock Info

Tailstock Quill Travel	6 in.
Tailstock Taper	MT#4
Tailstock Barrel Diameter	2.047 in.

Threading Info

Number of Longitudinal Feeds	17
Range of Longitudinal Feeds	0.002 – 0.067 in./rev.
Number of Cross Feeds	17
Range of Cross Feeds	0.001 – 0.034 in./rev
Number of Inch Threads	45
Range of Inch Threads	2 – 72 TPI
Number of Metric Threads	39
Range of Metric Threads	0.2 – 14.0 mm
Number of Modular Pitches	18
Range of Modular Pitches	0.3 – 3.5 MP
Number of Diametral Pitches	21
Range of Diametral Pitches	8 – 44 DP

Dimensions

Bed Width	10-1/4 in.
Leadscrew Diameter	1-1/8 in.
Leadscrew TPI	4 TPI
Leadscrew Length	61-1/2 in.
Steady Rest Capacity	5/16 – 4-5/16 in.
Follow Rest Capacity	5/8 – 3-1/8 in.
Faceplate Size	12 in.
Feed Rod Diameter	3/4 in.
Floor to Center Height	42 in.
Height With Leveling Jacks	43-1/2 in.

Construction

Base	Cast Iron
Headstock	Cast Iron
Headstock Gears	Flame Hardened Steel
Bed	Induction-Hardened, Precision-Ground Meehanite Cast Iron
Body	Cast Iron
Stand	Cast Iron
Paint	Urethane

Fluid Capacities

Headstock Capacity	16.9 qt.
Headstock Fluid Type	ISO 32 (eg. Grizzly T23963, Mobil DTE Light)
Gearbox Capacity	1.4 qt.
Gearbox Fluid Type	ISO 68 (eg. Grizzly T23962, Mobil Vactra 2)
Apron Capacity	1.2 qt.
Apron Fluid Type	ISO 68 (eg. Grizzly T23962, Mobil Vactra 2)
Coolant Capacity	11.1 qt.

Other

Country Of Origin	Taiwan (Some Components Made in USA & Japan)
Warranty	1 Year
Serial Number Location	ID Label on Rear of Left Stand
Approximate Assembly & Setup Time	2 Hours

Features

Allen Bradley Electrical Components
Fagor 2-Axis DRO
Meehanite Casting, Signature South Bend 3 V-Way Bed
Safety Chuck Guard with Micro-Switch Shut-Off
Halogen Work Light
4-Way Tool Post
Complete Recycling Coolant System
Micrometer Carriage Stop
Threading Dial Indicator
NSK or NTN Japanese Spindle Bearings
Full-Length Splash Guard
Front-Removable Sliding Chip Tray
Yaskawa G7A23P7 Inverter
Completely Enclosed Universal Gearbox for Cutting Inch, Metric, Modular, and Diametral Pitches
Pressurized Lubrication System for Headstock Gears and Bearings
Dial Controlled, Variable Spindle Speeds with Digital Read-Out
Jog and Emergency Stop Buttons

14" & 16" EVS TOOLROOM LATHES

MODELS SB1012/SB1014/SB1037 - 220V

MODELS SB1013/SB1015/SB1038 - 440V

Compiled Especially for SB1012/SB1013

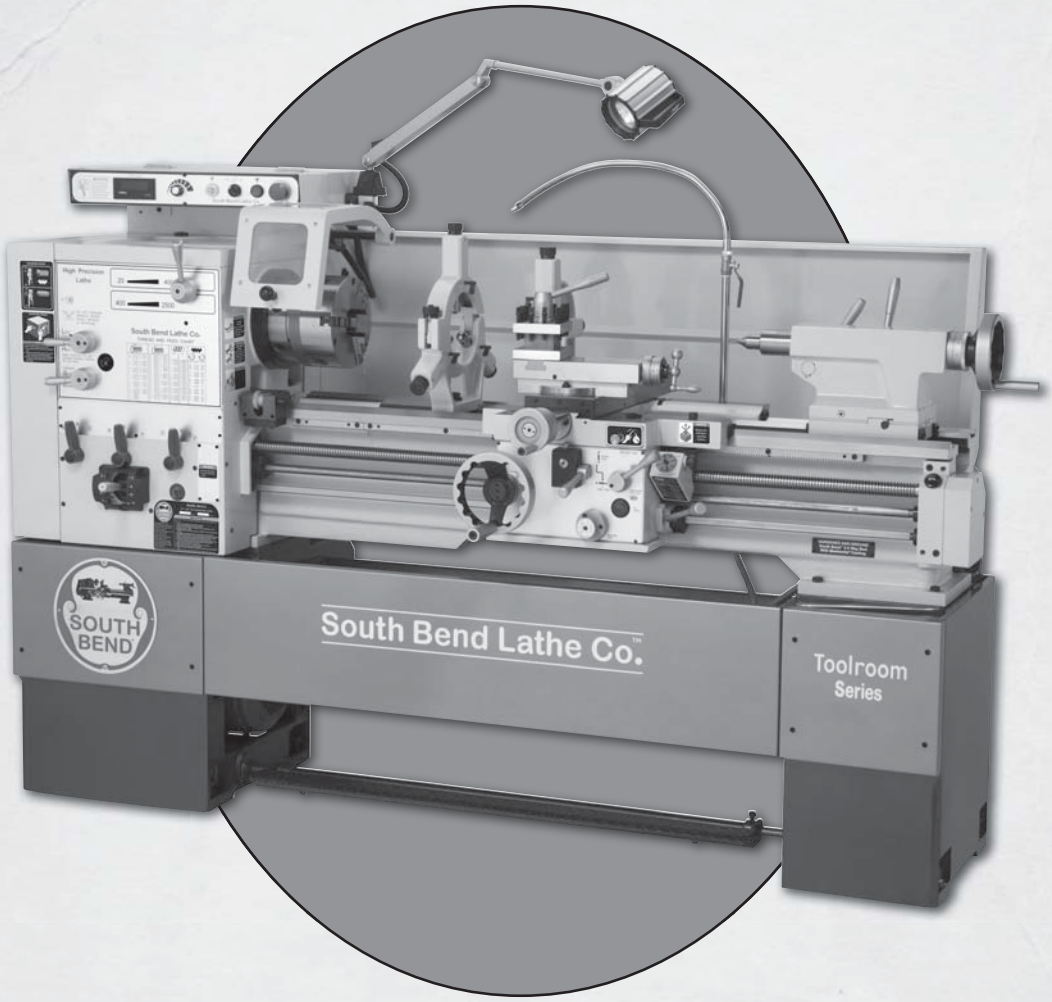

OWNER'S MANUAL

South Bend Lathe Co.™

Hundreds of Thousands of Lathes Sold With a Tradition of Quality Since 1906!

© March, 2010 by South Bend Lathe Co.

For Machines Mfg. Since 7/09

Scope of Manual

This manual helps the reader understand the machine, how to prepare it for operation, how to control it during operation, and how to keep it in good working condition. We assume the reader has a basic understanding of how to operate this type of machine, but that the reader is not familiar with the controls and adjustments of this specific model. As with all machinery of this nature, learning the nuances of operation is a process that happens through training and experience. If you are not an experienced operator of this type of machinery, read through this entire manual, then learn more from an experienced operator, schooling, or research before attempting operations. Following this advice will help you avoid serious personal injury and get the best results from your work.

Manual Feedback

We've made every effort to be accurate when documenting this machine. However, errors sometimes happen or the machine design changes after the documentation process—so the manual may not exactly match your machine. If a difference between the manual and machine leaves you in doubt, contact our customer service for clarification.

We highly value customer feedback on our manuals. If you have a moment, please share your experience using this manual. What did you like about it? Is there anything you would change to make it better? Did it meet your expectations for clarity, professionalism, and ease-of-use?

South Bend Lathe, Inc.
c/o Technical Documentation Manager
P.O. Box 2027
Bellingham, WA 98227
Email: manuals@southbendlathe.com

Updates

For your convenience, any updates to this manual will be available to download free of charge through our website at:

www.southbendlathe.com

Customer Service

We stand behind our machines. If you have any service questions, parts requests or general questions about your purchase, feel free to contact us.

South Bend Lathe Co.
P.O. Box 2027
Bellingham, WA 98227
Fax: (360) 676-1075 (International)
Fax: (360) 734-1639 (USA Only)
Email: cs@southbendlathe.com

Table of Contents

INTRODUCTION 3
About These Machines 3
Foreword 3
Capabilities 3
Features 3
Identification 4

SAFETY 5
Understanding Risks of Machinery 5
Basic Machine Safety 5
Additional Metal Lathe Safety 7

PREPARATION 8
Preparation Overview 8
Things You'll Need 8
Unpacking 8
Inventory 9
Cleaning & Protecting 10
Location 11
Physical Environment 11
Electrical Installation 11
Lighting 11
Weight Load 11
Space Allocation 11
Lifting & Moving 12
Leveling & Mounting 13
Leveling 13
Bolting to Concrete Floors 14
Assembly 14
Lubricating Lathe 14
Adding Cutting Fluid 15
Power Connection 15
SB1012 (220V 3-Phase) 15
SB1014, SB1037 (220V 3-Phase) 15
SB1013 (440V 3-Phase) 15
SB1015, SB1038 (440V 3-Phase) 15
Connecting Power Cord to Lathe 16
Hardwiring Lathe to Power Source 16
Correcting Out-of-Phase Wiring 17
Test Run 17
Spindle Break-In 21
Recommended Adjustments 22

OPERATION 23
Operation Overview 23
Description of Controls & Components 24
Main Power Switch 24
Headstock Controls 24
Carriage Controls 24
Control Panel 25
Tailstock Controls 26
Foot Brake 26
Chuck & Faceplate Mounting 27
Removing Chuck or Faceplate 27
Mounting Chuck or Faceplate 28
Installing and Adjusting Camlock Studs 29
3-Jaw Chuck 30
Changing Jaws 31
Mounting Workpiece 31
4-Jaw Chuck 32
Mounting Workpiece 32
Tailstock 32
Moving Along Bedway 33
Using Quill 33
Installing Tooling 33
Removing Tooling 33
Offsetting 34
Aligning 34
Faceplate 36
Mounting Workpiece with Clamps 36
Mounting Workpiece Between Centers 36
Centers 37
Dead Centers 37
Live Centers 37
Mounting Dead Center in Spindle 37
Removing Center from Spindle 38
Mounting Center in Tailstock 38
Removing Center from Tailstock 38
Steady Rest 39
Follow Rest 39
Compound Slide 40
Four-Way Tool Post 40
Aligning Cutting Tool with Tailstock Center 41
Aligning Cutting Tool with Tailstock Center 41
Adjustable Apron Stop System 42
Carriage Stop 42
Manual Feed 43
Carriage Handwheel 43
Compound Slide Handwheel 43
Spindle Speed 43
Determining Spindle Speed 43
Setting Spindle Speed 44

Power Feed 44
Power Feed Controls 45
Understanding Thread & Feed Rate Chart 46
Positioning Gearbox Levers 46
End Gear Setup 47
Threading Controls 48
Power Feed Lever 48
Half Nut Lever 48
Thread Dial & Chart Overview 48
Using Thread Dial and Chart 49
Chip Drawer 50
Cutting Fluid System 51

ACCESSORIES 52
Accessories 52

MAINTENANCE 54
Maintenance Schedule 54
Cleaning 54
Maintenance Chart 55
Lubrication 56
Headstock 56
Gearbox 58
Apron 58
Lead Screw & Feedrod Bearings 59
Lead Screw 59
Ways & Slides 59
Unpainted & Machined Surfaces 59
Ball Oilers 60
Cleaning Electrical Box Filter 60
End Gearing 61
Cutting Fluid System 62
Hazards 62
Adding Fluid 62
Changing Cutting Fluid 63
Machine Storage 64

SERVICE 65
Backlash Adjustment 65
Compound Leadscrew 65
Cross Slide Leadscrew 65
Leadscrew End Play Adjustment 66
Gib Adjustment 66
Half Nut Adjustment 67
Feedrod Clutch Adjustment 68
V-Belts 69
Brake & Switch 69
Leadscrew Shear Pin Replacement 71
Gap Removal & Installation 73

TROUBLESHOOTING 74

WARRANTY & RETURNS 77

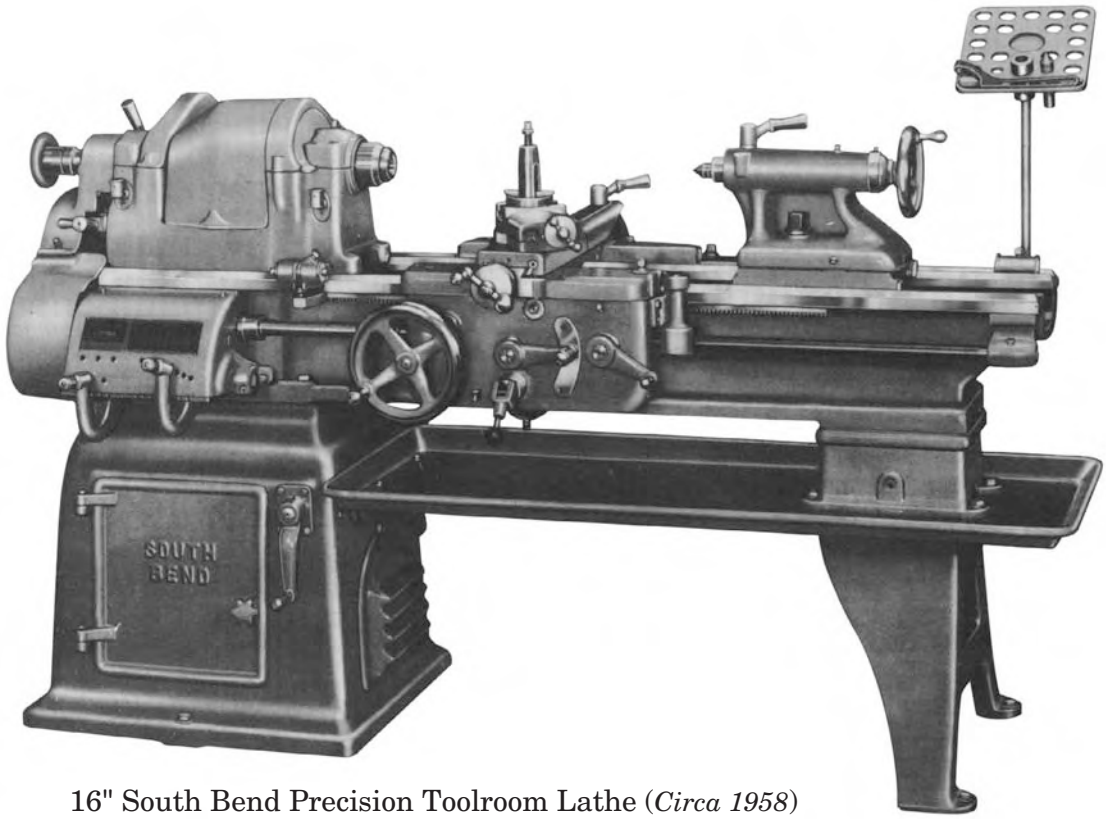

16" South Bend Precision Toolroom Lathe (*Circa 1958*)

About These Machines

Foreword

"*The screw cutting engine lathe is the oldest and most important of machine tools and from it all other machine tools have been developed. It was the lathe that made possible the building of the steamboat, the locomotive, the electric motor, the automobile and all kinds of machinery used in industry. Without the lathe our great industrial progress of the last century would have been impossible.*" —**How To Run a Lathe**, 15th Edition, South Bend Lathe.

The lathes represented in this manual are a modern day version of the screw cutting lathes that trace their roots back to the 1700's, which were themselves technological improvements of the bow lathe that can be traced back thousands of years to the ancient Egyptians.

Now, almost 300 years later, these modern "screw cutting" lathes are not just a piece of refined machinery, but a culmination of human ingenuity and knowledge embodied into the design and synergy of thousands of interworking parts—some of which represent the life's work and dreams of many inventors, mechanical engineers, and world-class machinists—including the likes of Leonardo da Vinci, Henry Maudsley, and the founders of South Bend Lathe, John and Miles O'Brien.

And now the torch is passed to you—to take the oldest and most important type of machine tool—and carry on the tradition. As the operator of a South Bend Lathe, you now join the ranks of some very famous and important customers, such as Henry Ford, who used the machines he purchased to help him change the world.

Capabilities

These EVS Toolroom Lathes are built for daily use in a busy industrial setting. Loaded with many nice features and high-precision parts, these lathes excel at making fine tools, dies, thread gauges, jigs, and precision test gauges—however, they are by no means delicate. Thick castings, heavy weight, and quality construction throughout provide the necessary brawn for demanding production and manufacturing tasks.

Features

As the name implies, these lathes feature EVS (Electronic Variable Speed) spindle control, which allows the operator to quickly set the exact spindle speed within the available range of 20–2500 RPM. Spindle speed is displayed on a digital readout and controlled within each speed range with the use of a dial—no changing gears or looking up complex lever positions on a chart.

The beds of these lathes are constructed with Meehanite castings that have been precision hardened and ground in the traditional 3-V prismatic design—long used on South Bend Lathes for its accuracy, durability, and rigidity.

The headstock features quick-change gear levers and an adjustable clutch mechanism for the feed rod that can be set to prevent damage in the event of a crash.

To further ensure a high degree of accuracy, these lathes are equipped with NSK or NTN spindle bearings. The spindles are the D1-6 camlock type with an MT#6 taper and 2.0625" bore. The tailstock quills have an MT#4 taper and offer 6" of travel.

The EVS lathes also include a pressurized headstock oiling system that pre-lubricates bearings/gears before the spindle starts and delivers perfect lubrication during low speed operations (compare to conventional splash and bath oil systems that leave bearings/gears starved for oil when the spindle is first started and during low speed operations).

Finally, these EVS toolroom lathes are packed with standard features, such as a complete coolant system, easy-to-clean chip drawer, one-shot way lubrication system, included steady and follow rests, adjustable work lamp, foot brake, and powered cross feed.

Identification

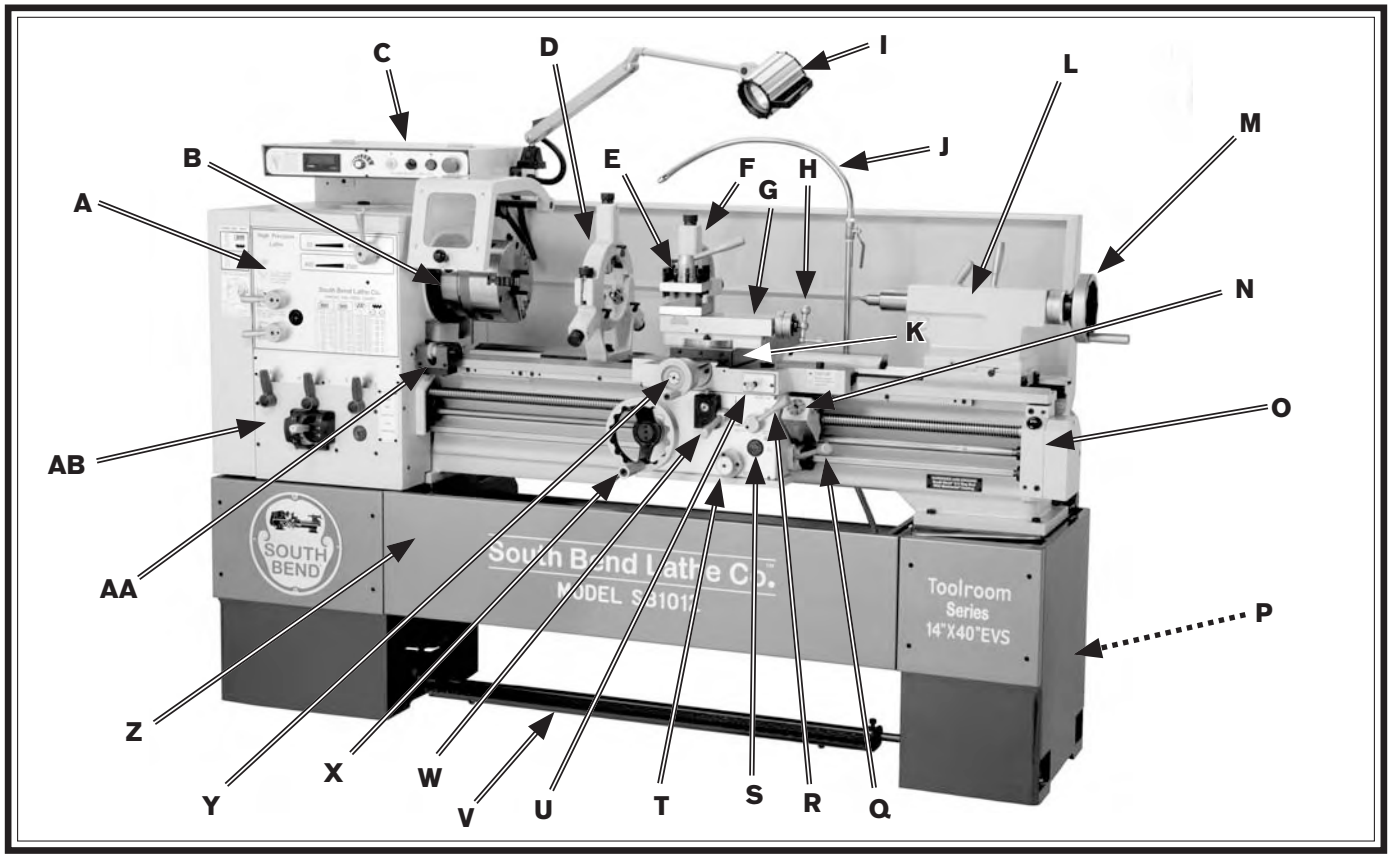

Figure 1. The 14" & 16" EVS Lathe.

A. Headstock
B. D1-6 Camlock MT#6 Spindle
C. Control Panel
D. Ball Bearing Style Steady Rest
E. 4-Position Tool Holder
F. Follow Rest
G. Compound Slide
H. Compound Slide Handwheel
I. Work Lamp
J. Universal Cutting Fluid Tube and Nozzle
K. Cross Slide
L. Tailstock
M. Tailstock Handwheel
N. Thread Dial
O. Leadscrew Bearing Housing
P. Cutting Fluid Pump/Tank
Q. Spindle Rotation ON/OFF Lever
R. Half Nut Lever
S. Apron Oil Level Sight Glass
T. Quick Change Apron Feed Direction Knob
U. Manual Way Oil Pump
V. Brake Pedal
W. Feed Control Lever
X. Apron Handwheel
Y. Cross Slide Handwheel
Z. Removable Chip Drawer
AA. Micrometer Stop
AB. Quick Change Gearbox

⚠WARNING

Serious personal injury could occur if you connect the machine to power before completing the setup process. DO NOT connect power until instructed to do so later in this manual.

⚠WARNING

Untrained users have an increased risk of seriously injuring themselves with this machine. Do not operate this machine until you have understood this entire manual and received proper training.

Understanding Risks of Machinery

Operating all machinery and machining equipment can be dangerous or relatively safe depending on how it is installed and maintained, and the operator's experience, common sense, risk awareness, working conditions, and use of personal protective equipment (safety glasses, respirators, etc.).

The owner of this machinery or equipment is ultimately responsible for its safe use. This responsibility includes proper installation in a safe environment, personnel training and usage authorization, regular inspection and maintenance, manual availability and comprehension, application of safety devices, integrity of cutting tools or accessories, and the usage of approved personal protective equipment by all operators and bystanders.

The manufacturer of this machinery or equipment will not be held liable for injury or property damage from negligence, improper training, machine modifications, or misuse. Failure to read, understand, and follow the manual and safety labels may result in serious personal injury, including amputation, broken bones, electrocution, or death.

The signals used in this manual to identify hazard levels are defined as follows:

⚠DANGER	***Death or catastrophic harm WILL occur.***	**⚠CAUTION**	***Moderate injury or fire MAY occur.***
⚠WARNING	***Death or catastrophic harm COULD occur.***	***NOTICE***	***Machine or property damage may occur.***

Basic Machine Safety

1. **Owner's Manual:** All machinery and machining equipment presents serious injury hazards to untrained users. To reduce the risk of injury, anyone who uses THIS item MUST read and understand this entire manual before starting.

2. **Personal Protective Equipment:** Operating or servicing this item may expose the user to flying debris, dust, smoke, dangerous chemicals, or loud noises. These hazards can result in eye injury, blindness, long-term respiratory damage, poisoning, cancer, reproductive harm or hearing loss. Reduce your risks from these hazards by wearing approved eye protection, respirator, gloves, or hearing protection.

3. **Trained/Supervised Operators Only:** Untrained users can seriously injure themselves or bystanders. Only allow trained and properly supervised personnel to operate this item. Make sure safe operation instructions are clearly understood. If electrically powered, use padlocks and master switches, and remove start switch keys to prevent unauthorized use or accidental starting.

4. **Guards/Covers:** Accidental contact with moving parts during operation may cause severe entanglement, impact, cutting, or crushing injuries. Reduce this risk by keeping any included guards/covers/doors installed, fully functional, and positioned for maximum protection.

5. **Entanglement:** Loose clothing, gloves, neckties, jewelry or long hair may get caught in moving parts, causing entanglement, amputation, crushing, or strangulation. Reduce this risk by removing/securing these items so they cannot contact moving parts.

6. **Mental Alertness:** Operating this item with reduced mental alertness increases the risk of accidental injury. Do not let a temporary influence or distraction lead to a permanent disability! Never operate when under the influence of drugs/alcohol, when tired, or otherwise distracted.

7. **Safe Environment:** Operating electrically powered equipment in a wet environment may result in electrocution; operating near highly flammable materials may result in a fire or explosion. Only operate this item in a dry location that is free from flammable materials.

8. **Electrical Connection:** With electically powered equipment, improper connections to the power source may result in electrocution or fire. Always adhere to all electrical requirements and applicable codes when connecting to the power source. Have all work inspected by a qualified electrician to minimize risk.

9. **Disconnect Power:** Adjusting or servicing electrically powered equipment while it is connected to the power source greatly increases the risk of injury from accidental startup. Always disconnect power BEFORE any service or adjustments, including changing blades or other tooling.

10. **Secure Workpiece/Tooling:** Loose workpieces, cutting tools, or rotating spindles can become dangerous projectiles if not secured or if they hit another object during operation. Reduce the risk of this hazard by verifying that all fastening devices are properly secured and items attached to spindles have enough clearance to safely rotate.

11. **Chuck Keys or Adjusting Tools:** Tools used to adjust spindles, chucks, or any moving/rotating parts will become dangerous projectiles if left in place when the machine is started. Reduce this risk by developing the habit of always removing these tools immediately after using them.

12. **Work Area:** Clutter and dark shadows increase the risks of accidental injury. Only operate this item in a clean, non-glaring, and well-lighted work area.

13. **Properly Functioning Equipment:** Poorly maintained, damaged, or malfunctioning equipment has higher risks of causing serious personal injury compared to those that are properly maintained. To reduce this risk, always maintain this item to the highest standards and promptly repair/service a damaged or malfunctioning component. Always follow the maintenance instructions included in this documentation.

14. **Unattended Operation:** Electrically powered equipment that is left unattended while running cannot be controlled and is dangerous to bystanders. Always turn the power ***OFF*** before walking away.

15. **Health Hazards:** Certain cutting fluids and lubricants, or dust/smoke created when cutting, may contain chemicals known to the State of California to cause cancer, respiratory problems, birth defects, or other reproductive harm. Minimize exposure to these chemicals by wearing approved personal protective equipment and operating in a well ventilated area.

16. **Difficult Operations:** Attempting difficult operations with which you are unfamiliar increases the risk of injury. If you experience difficulties performing the intended operation, STOP! Seek an alternative method to accomplish the same task, ask a qualified expert how the operation should be performed, or contact our Technical Support for assistance.

Additional Metal Lathe Safety

1. **Clearing Chips.** Metal chips can easily cut bare skin—even through a piece of cloth. Avoid clearing chips by hand or with a rag. Use a brush or vacuum to clear metal chips.

2. **Chuck Key Safety.** A chuck key left in the chuck can become a deadly projectile when the spindle is started. Always remove the chuck key after using it. Develop a habit of not taking your hand off of a chuck key unless it is away from the machine.

3. **Tool Selection.** Cutting with an incorrect or dull tool increases the risk of accidental injury because extra force is required for the operation, which increases risk of breaking or dislodging components, which can cause small shards of metal to become dangerous projectiles. Always select the right cutter for the job and make sure it is sharp. A correct, sharp tool decreases strain and provides a better finish.

4. **Securing Workpiece.** An improperly secured workpiece can fly off of the lathe spindle with deadly force, which can result in a severe impact injury. Make sure the workpiece is properly secured in the chuck or faceplate before starting the lathe.

5. **Large Chucks.** Large chucks are very heavy and difficult to grasp, which can lead to crushed fingers or hands if mishandled. Get assistance when installing or removing large chucks to reduce this risk. Protect your hands and the precision-ground ways by using a chuck cradle or piece of plywood over the ways of the lathe when servicing chucks.

6. **Safe Clearances.** Workpieces that crash into other components on the lathe may throw dangerous projectiles in all directions, leading to impact injury and damaged equipment. Before starting the spindle, make sure the workpiece has adequate clearance by hand-rotating it through its entire range of motion. Also, check the tool and tool post clearance, chuck clearance, and saddle clearance.

7. **Speed Rates.** Operating the lathe at the wrong speed can cause nearby parts to break or the workpiece to come loose, which will result in dangerous projectiles that could cause severe impact injury. Large workpieces must be turned at slow speeds. Always use the appropriate feed and speed rates.

8. **Stopping Spindle by Hand.** Stopping the spindle by putting your hand on the workpiece or chuck creates an extreme risk of entanglement, impact, crushing, friction, or cutting hazards. Never attempt to slow or stop the lathe spindle with your hand. Allow the spindle to come to a stop on its own or use the brake (if equipped).

9. **Crashes.** Driving the cutting tool or other lathe components into the chuck may cause an explosion of metal fragments, which can result in severe impact injuries and major damage to the lathe. Reduce this risk by releasing automatic feeds after use, not leaving lathe unattended, and checking clearances before starting the lathe. Make sure no part of the tool, tool holder, compound slide, cross slide, or carriage will contact the chuck during operation.

10. **Long Stock Safety.** Long stock can whip violently if not properly supported, causing serious impact injury and damage to the lathe. Reduce this risk by supporting any stock that extends from the chuck/headstock more than three times its own diameter. Always turn long stock at slow speeds.

11. **Coolant Safety.** Contaminated cutting fluid is a very poisonous biohazard that can cause personal injury from skin contact alone. Incorrectly positioned cutting fluid nozzles can splash on the operator or the floor, resulting in an exposure or slipping hazard. To decrease your risk, change cutting fluid regularly and position the cutting fluid nozzle where it will not splash or end up on the floor.

Preparation Overview

The purpose of the preparation section is to help you prepare your machine for operation. The list below outlines the basic process to follow to prepare the lathe for operation. Specific steps for each of these points will be covered in detail later in this section.

The typical preparation process is as follows:

1. Unpack the lathe and inventory the contents of the box/crate.
2. Clean the lathe and its components.
3. Identify an acceptable location for the lathe and move it to that location.
4. Level the lathe and either bolt it to the floor or place it on mounts.
5. Assemble the loose components and make any necessary adjustments or inspections to ensure the lathe is ready for operation.
6. Connect the lathe to the power source.
7. Test run the lathe to make sure it functions properly and is ready for operation.

Things You'll Need

To complete the preparation process, you will need the following items:

For Lifting and Moving

- A Forklift or Other Power Lifting Device (rated for at least 5000 lbs).
- Lifting Strap or Chain with Hook (rated for at least 5000 lbs.)
- Helper for moving machine.
- Two 12" 2x6's
- Precision Level

For Power Connection

- A qualified electrician to ensure a safe and code-compliant connection to the power source. (Refer to **Page 15** for details.)

For Assembly

- Cotton Rags
- Mineral Spirits
- Quality Metal Protectant Oil
- Safety Glasses
- Wrench or Socket 21mm
- Wrench or Socket 19mm
- Floor Mounting Hardware as Needed
- Standard Screwdriver #2

Unpacking

This item was carefully packaged to prevent damage during transport. If you discover any damage, please immediately call Customer Service at (360) 734-1540 for advice. You may need to file a freight claim, so save the containers and all packing materials for possible inspection by the carrier or its agent.

Inventory

Main Inventory 1: (Figure 2)		Qty
A.	Steady Rest Assembly	1
B.	12" Faceplate w/D1-6 Camlock Stud Set	1
C.	10" Four-Jaw Chuck w/Combo Jaws	1
D.	Four-Jaw Chuck Key	1
E.	Four-Jaw Chuck D1-6 Camlock Stud Set	1
F.	Follow Rest Assembly	1

Tool Box Inventory: (Figure 3)		Qty
G.	Tool Box	1
H.	Three-Jaw Chuck Key	1
I.	Tool Post T-Wrench	1
J.	Hex Wrench Set 1.5-10mm	1
K.	Dead Center MT#4	1
L.	Carbide-Tipped Dead Center MT#4	1
M.	Tapered Spindle Sleeve MT#6-#4	1
N.	Open End Wrench 22/24mm	1
O.	Open End Wrench 14/17mm	1
P.	Open End Wrench 10/12mm	1
Q.	Phillips Screwdriver #2	1
R.	Standard Screwdriver #2	1
S.	9"-Chuck Jaws (SB1014-15, SB1037-38)	3
	8"-Chuck Jaws (SB1012-13)	3
T.	Cast Iron Leveling Pads	8
U.	Handwheel Handles	2

Note: Some inventory components may be shipped inside of the lathe electrical box. These items MUST be removed before connecting the lathe to the power source.

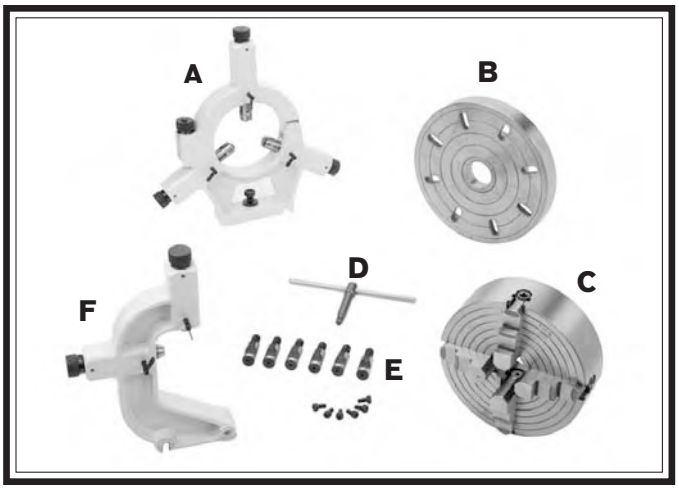

Figure 2. Main inventory.

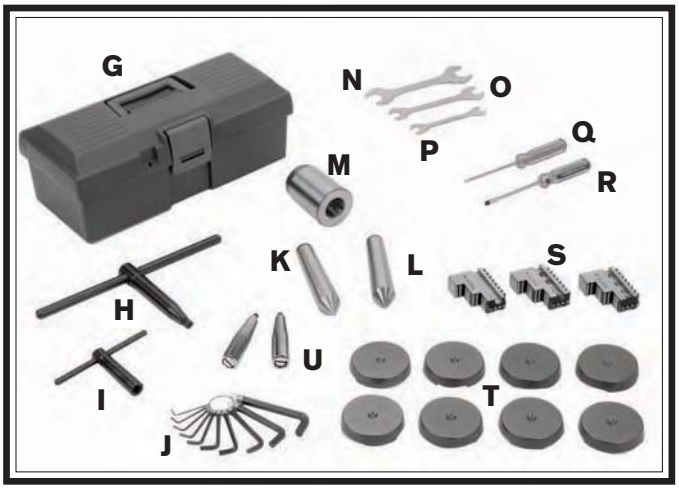

Figure 3. Toolbox inventory.

Cleaning & Protecting

The unpainted surfaces are coated at the factory with a heavy-duty rust preventative that prevents corrosion during shipment and storage. The benefit of this rust preventative is that it works very well. The downside is that it can be time-consuming to thoroughly remove.

Be patient and do a careful job when cleaning and removing the rust preventative. The time you spend doing this will reward you with smooth-sliding parts and a better appreciation for the proper care of the unpainted surfaces.

Although there are many ways to successfully remove the rust preventative, we have cleaned thousands of machines and found the following process to be the best balance between efficiency and minimized exposure to toxic fumes or chemicals.

Before cleaning, gather the following:

- Disposable rags
- Cleaner/degreaser (certain citrus-based degreasers work extremely well and they have non-toxic fumes)
- Safety glasses & disposable gloves

Note: Automotive degreasers, mineral spirits, or WD•40 can be used to remove rust preventative. Before using these products, though, test them on an inconspicuous area of a painted area to make sure they will not damage it.

⚠WARNING

Gasoline and petroleum products have low flash points and can explode or cause fire if used for cleaning. Avoid using these products to remove rust preventative.

⚠CAUTION

Many cleaning solvents are toxic if inhaled. Minimize your risk by only using these products in a well ventilated area.

NOTICE

Avoid chlorine-based solvents, such as acetone or brake parts cleaner that may damage painted surfaces. Always follow the manufacturer's instructions when using any type of cleaning product.

Basic steps for removing rust preventative:

1. Put on safety glasses and disposable gloves.

2. Coat all surfaces that have rust preventative with a liberal amount of your cleaner or degreaser and let them soak for a few minutes.

3. Wipe off the surfaces. If your cleaner or degreaser is effective, the rust preventative will wipe off easily.

Note: To clean off thick coats of rust preventative on flat surfaces, such as beds or tables, use a PLASTIC paint scraper to scrape off the majority of the coating before wiping it off with your rag. (Do not use a metal scraper or it may scratch the surface.)

4. Repeat **Steps 2–3** as necessary until clean, then coat all unpainted surfaces with a quality metal protectant or light oil to prevent rust.

Location

Physical Environment

The physical environment where your machine is operated is important for safe operation and longevity of parts. For best results, operate this machine in a dry environment that is free from excessive moisture, hazardous or flammable chemicals, airborne abrasives, or extreme conditions. Extreme conditions for this type of machinery are generally those where the ambient temperature is outside the range of 41°–104°F; the relative humidity is outside the range of 20–95% (non-condensing); or the environment is subject to vibration, shocks, or bumps.

Electrical Installation

Place this machine near an existing power source. Make sure all power cords are protected from traffic, material handling, moisture, chemicals, or other hazards. Make sure to leave access to a means of disconnecting the power source or engaging a lockout/tagout device.

Lighting

Lighting around the machine must be adequate enough that operations can be performed safely. Shadows, glare, or strobe effects that may distract or impede the operator must be eliminated.

Weight Load

Refer to the **Machine Specifications** for the weight of your machine. Make sure that the surface upon which the machine is placed will bear the weight of the machine, additional equipment that may be installed on the machine, and the heaviest workpiece that will be used. Additionally, consider the weight of the operator and any dynamic loading that may occur when operating the machine.

Space Allocation

Consider the largest size of workpiece that will be processed through this machine and provide enough space around the machine for adequate operator material handling or the installation of auxiliary equipment. With permanent installations, leave enough space around the machine to open or remove doors/covers as required by the maintenance and service described in this manual.

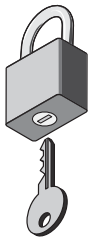

⚠CAUTION

Children or untrained people may be seriously injured by this machine. Only install in an access restricted location.

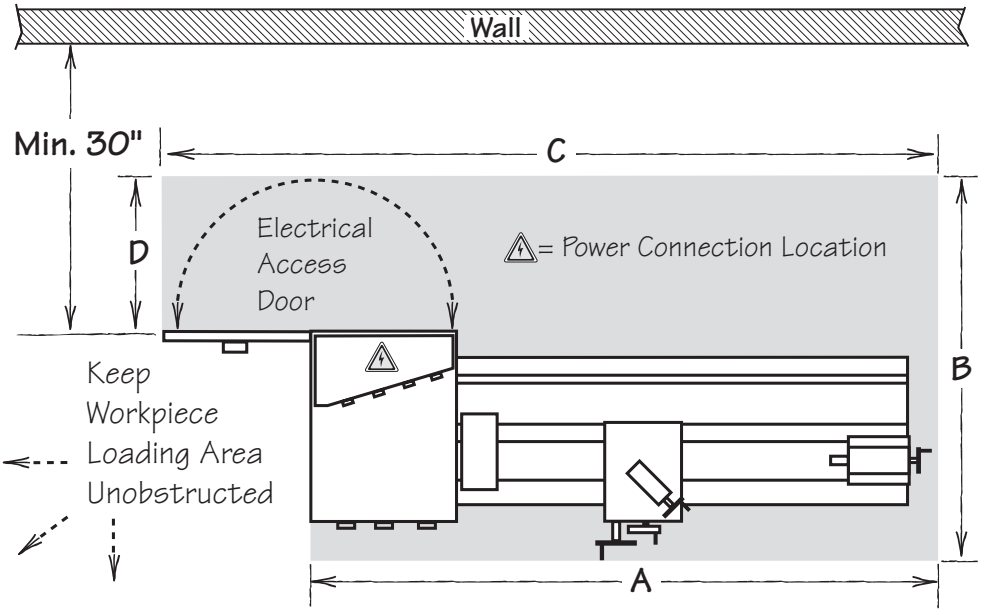

	SB1012-13	SB1014-15	SB1037-38
A	90"	109"	90"
B	60"	60"	60"
C	112"	130"	112"
D	20½"	20½"	20½"

Figure 4. Space required for full range of movement.

Lifting & Moving

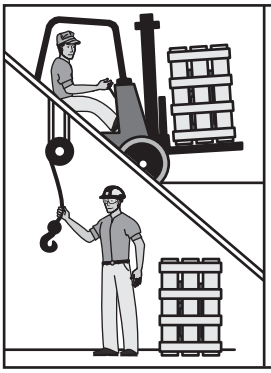

⚠WARNING

This machine and its parts are heavy! Serious personal injury may occur if safe moving methods are not used. To reduce the risk of a lifting or dropping injury, ask others for help and use power equipment.

Do not attempt to lift or move this lathe if you do not have the proper equipment or the necessary assistance from other people. All lifting equipment must be rated to at least 5,000 lbs. to account for dynamic loads from bouncing or pulling that may be applied while lifting. Refer to the **Things You'll Need** section on **Page 8** for details.

To lift and move your lathe:

1. Prepare the permanent location for the lathe.

2. Remove the shipping crate top and sides, then remove the small components from the shipping pallet.

3. To balance the lifting load, loosen the tailstock lock lever (**Figure 5**), move the tailstock to the end of the bedway, then lock it in place.

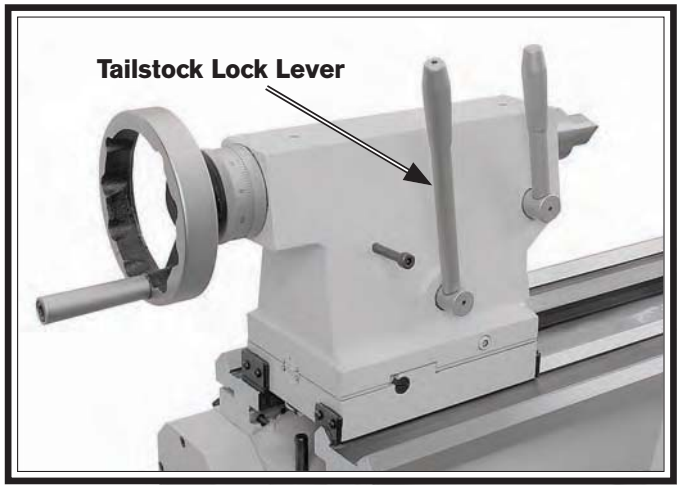

Figure 5. Tailstock lock lever.

4. To further balance the load, loosen the carriage lock bolt (see **Figure 6**), disengage the half nut lever, put the feed control lever in neutral, then use the carriage handwheel to move the carriage next to the tailstock.

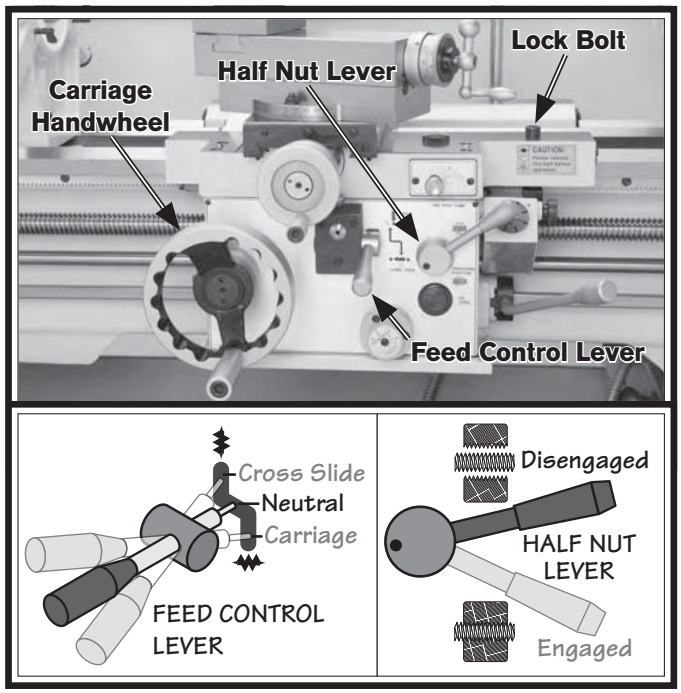

Figure 6. Carriage controls set for moving the carriage.

5. Position a 12" long 2x6 board under each end of the bed, as shown in **Figure 7**, wrap the lifting straps around the bottom of the 2x6's.

Note: The 2x6's extend the lifting straps away from the bottom of the bed to prevent machine damage from excessive strap pressure against the leadscrew, feed rod, and spindle control rod. Make sure to use them.

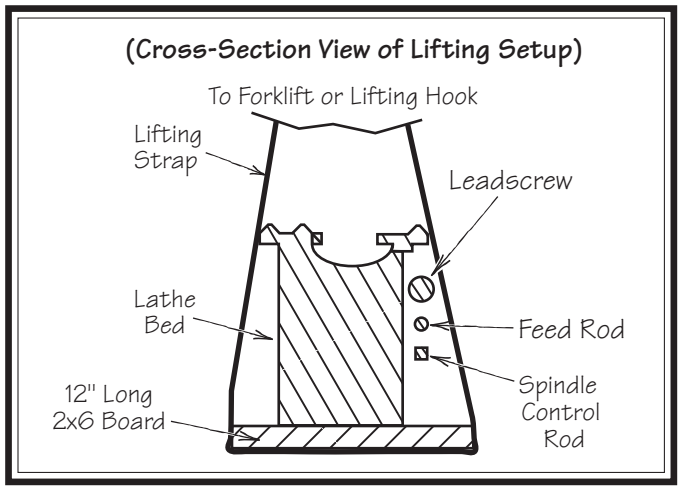

Figure 7. Cross section of lifting setup to keep strap from putting pressure against leadscrew or rods.

6. Attach the lifting straps to forklift forks or a hook and chain, as shown in **Figures 8–9**.

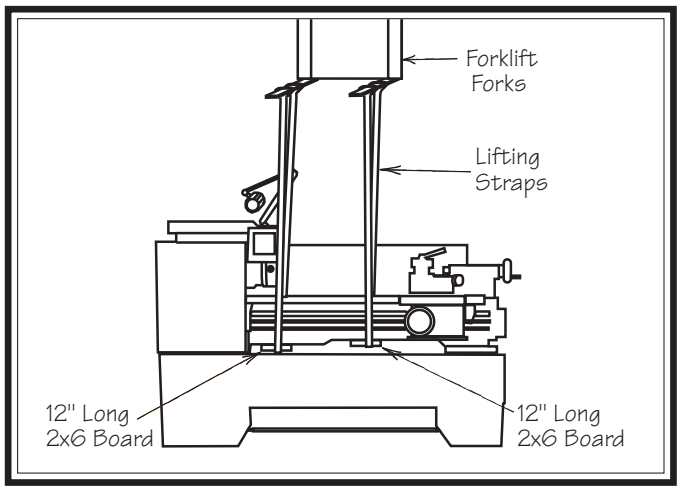

Figure 8. Lathe set up for lifting with forklift.

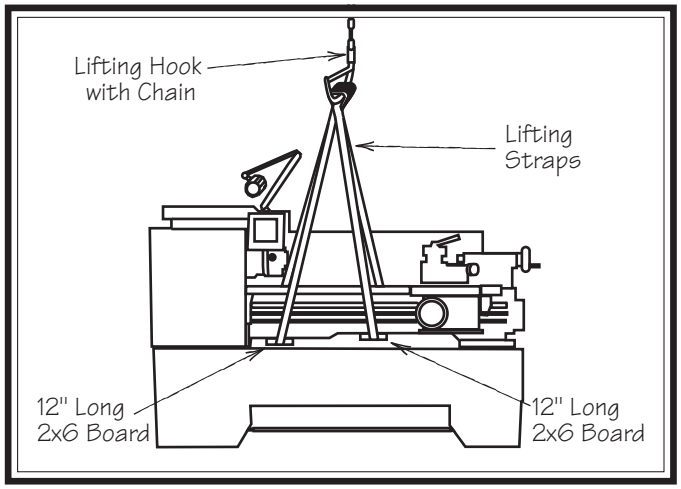

Figure 9. Lathe set up for lifting with hook and chain.

7. Unbolt the lathe from the shipping pallet, then with an assistant to help keep the lathe from swaying, raise the lathe a couple of inches.

— If the load is not well balanced, or you see any other difficulties with the lifting equipment, immediately lower the lathe to the pallet again. Resolve any lifting or balancing issues, then repeat this step.

8. With assistance to steady the load, move it to the prepared location and lower it in place.

Leveling & Mounting

You must level your machine and either use the included foot pads and leveling hardware or bolt your lathe to the floor. Because mounting your lathe to the floor with permanent hardware is an optional step and floor materials may vary, floor mounting hardware is not included.

Leveling

NOTICE

For accurate turning results and to prevent warping the cast iron bed and ways, the lathe bedways MUST be leveled from side-to-side and from front-to-back.

Re-check the bedways 24 hours after installation, two weeks after that, and then annually to make sure they remain level.

Leveling machinery helps precision components, such as bedways, remain straight and flat during the lifespan of the machine. Components on an unleveled machine may slowly twist due to the dynamic loads placed on the machine during operation.

For best results, use a precision level that is at least 12" long and sensitive enough to show a distinct movement when a 0.003" shim (approximately the thickness of one sheet of standard newspaper) is placed under one end of the level.

See the figure below for an example of a high precision level.

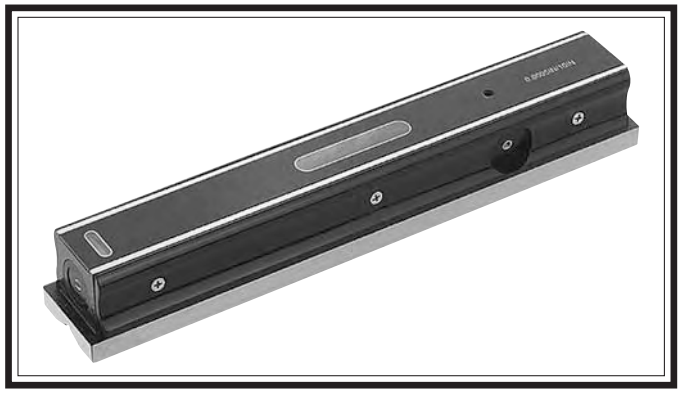

Figure 10. Example of a precision level.

To level the machine, use a precision level to make sure the bedways are level from side-to-side and from front-to-back.

— If using the included leveling pads (**Figure 11**), place them under the six leveling stud locations, then adjust the studs to level the lathe.

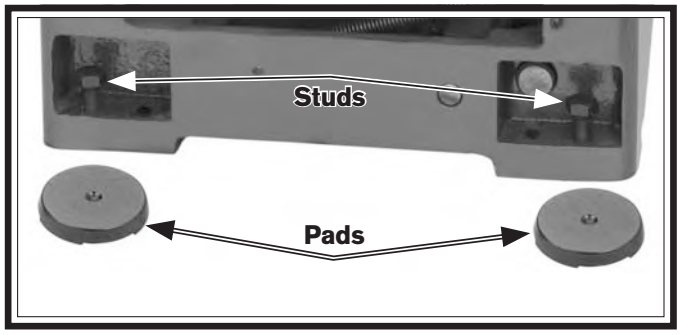

Figure 11. Leveling pads and screws.

— If using mounting hardware that does not allow for adjustment, level the lathe by placing metal shims between the lathe base and the floor before bolting down.

Bolting to Concrete Floors

Lag screws and anchors, or anchor studs (**below**), are two popular methods for securing machinery to a concrete floor. We suggest you research the many options and methods for securing your machine and choose the best one for your specific application.

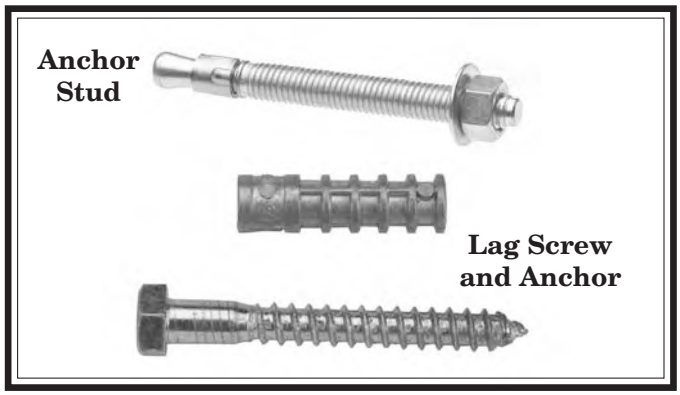

Figure 12. Common types of fasteners for bolting machinery to concrete floors.

NOTICE

Most electrical codes require that machines connected to the power source by fixed conduit MUST be secured to the floor.

Assembly

With the exception of the handwheel handles, the lathe is shipped fully assembled.

To install the handwheel handles, thread the large handle into the carriage handwheel and the small handle into the cross slide handwheel, as shown in **Figure 13**.

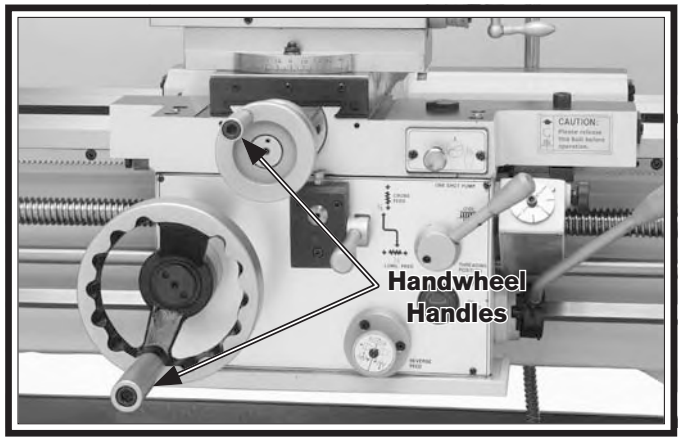

Figure 13. Handwheel handles installed.

Lubricating Lathe

The headstock, gearbox, and apron oil reservoirs must have the proper amount of oil in them before the lathe can be operated for the first time.

Running the lathe without oil in a gearbox is considered unwarrantable abuse, which may result in damage to the bearings and gears. Refer to the **Lubrication** section, beginning on **Page 56**, for details on how to check and add oil.

In addition to the gearboxes, we also recommend that you lubricate all other points on the machine at this time. This can be accomplished by following the maintenance schedule on **Page 54**.

Note: If your lathe was shipped with oil in the gearboxes, do not change that oil until after the break-in period.

Adding Cutting Fluid

Add the cutting fluid of your choice now. For detailed instructions on where the cutting fluid tank is located and how to add fluid, refer to **Cutting Fluid System** on **Page 62**.

Power Connection

⚠WARNING

Electrocution or fire may occur if machine is ungrounded, incorrectly connected to power, or connected to an undersized circuit. Use a qualified electrician to ensure a safe power connection.

Once all preparation steps previously described in this manual have been completed, the machine can be connected to the power source. In order to be connected to the power source, a circuit must be installed/prepared that meets the requirements of the lathe, and a power connection method must be established for that circuit. The following lists show the minimum requirements for each model, and instructions follow for each connection method.

Note About Power Cords: Using an incorrectly sized cord causes electrical components on the machine and the cord to become very hot, which will greatly decrease the life of electrical components or result in fire. For best results, use the shortest length of cord possible for your machine, and never use a smaller cord gauge than the specified minimum.

NOTICE

This machine is equipped with a frequency drive that contains sensitive electronics, which can be damaged by a phase converter. DO NOT use a phase converter to power this machine. Doing so will void the warranty.

SB1012 (220V 3-Phase)

Full Load Amp Draw ..... 15.7 Amps
Phase 3-Phase
Frequency ..... 60 Hz
Minimum Circuit Size ..... 20 Amps
Recommended Plug/Receptacle .....NEMA L15-20
Minimum Cord Size ..... 12 AWG, 4-Wire, 300V
Maximum Cord Length ..... 50 ft.

SB1014, SB1037 (220V 3-Phase)

Full Load Amp Draw ..... 21.7 Amps
Phase 3-Phase
Frequency ..... 60 Hz
Minimum Circuit Size ..... 30 Amps
Recommended Plug/Receptacle .....NEMA L15-30
Minimum Cord Size ..... 8 AWG, 4-Wire, 300V
Maximum Cord Length ..... 50 ft.

SB1013 (440V 3-Phase)

Full Load Amp Draw ..... 7.75 Amps
Phase 3-Phase
Frequency ..... 60 Hz
Minimum Circuit Size ..... 15 Amps
Recommended Power Connection ..... Hardwire*

SB1015, SB1038 (440V 3-Phase)

Full Load Amp Draw ..... 10.75 Amps
Phase 3-Phase
Frequency ..... 60 Hz
Minimum Circuit Size ..... 15 Amps
Recommended Power Connection ..... Hardwire*

* Hardwire setups must include a locking disconnect switch between the power source and the lathe. Refer to **Page 16** for more details.

Connecting Power Cord to Lathe

⚠DANGER

Electrocution or death will occur if you attempt this procedure with the power cord connected to the power source. The cord must be disconnected from power before performing this procedure.

These instructions are for setups where the lathe will be connected to the power source with a power cord and plug, as opposed to a hardwire setup.

To connect power cord to the lathe:

1. Unlock and open the main electrical cabinet door, and install a strain relief in the location shown in **Figure 14**.

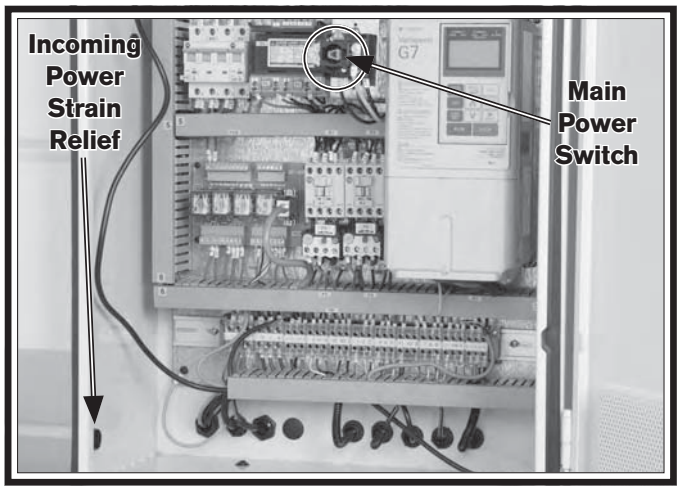

Figure 14. Location to connect power inside main electrical cabinet.

2. Thread the power cord through the strain relief, and up to the main power switch shown in **Figure 14**.

3. Connect the incoming L1, L2, L3 and ground wires to the main power switch terminals, as illustrated in **Figure 15**.

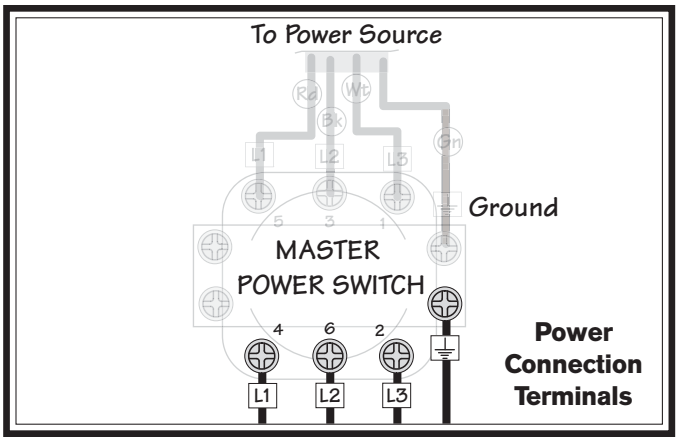

Figure 15. Power connection at main power switch.

4. Make sure the cord/wires have loose slack between the strain relief and terminal connections, then tighten the strain relief to secure the power cord.

Note: The strain relief must be tightened against the outermost jacket of the cord. Avoid over-tightening the strain relief or it may crush the cord and cause a short.

5. Test the strain relief to ensure it is properly tightened by pulling the cord from outside the box with light-to-moderate force. When the strain relief is properly tightened, the cord will not slide.

6. Close and lock the main electrical box door.

Hardwiring Lathe to Power Source

Hardwire setups require power supply lines to be enclosed inside of conduit, which is securely mounted and constructed in adherence to applicable electrical codes.

A hardwire setup for this machine must be equipped with a locking disconnect switch as a means to disconnect the power during adjustments or maintenance, which is a typical requirement for lock-out/tag-out safety programs (commonly required by OSHA).

Figure 16 shows a simple diagram of a hardwire setup with a locking disconnect switch between the power source and the machine.

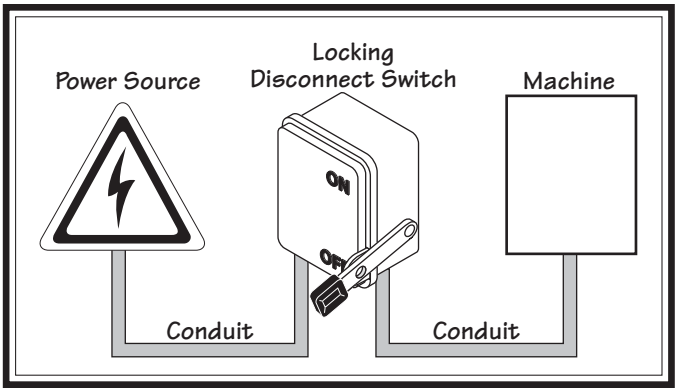

Figure 16. Typical hardwire setup with a locking disconnect switch.

Due to the complexity required for planning, bending, and installing the conduit necessary for a hardwire setup, this type of setup can only be performed by an experienced electrician.

For Electrician: Connect the incoming power wires as shown in **Figure 15**.

Correcting Out-of-Phase Wiring

This sub-section is only provided for troubleshooting. If you discover during the test run that the lathe will not operate, or that the spindle runs backwards, the lathe may be wired out of phase. Without the proper test equipment to determine the phase of power source legs, wiring machinery to 3-phase power may require trial-and-error. Correcting this is simply a matter of reversing the positions where two of the incoming power source wires are connected.

To correct wiring that is out of phase:

1. Push the stop button, turn the main power switch to OFF, and disconnect the machine from power (or shut OFF and lock out the power source if hardwired).

2. Open the electrical box and disconnect the L1 and L2 wires shown in **Figure 15** on the "To Power Source" side of the switch.

3. Connect the L1 wire to the terminal where the L2 wire was connected originally.

4. Connect the L2 wire to the terminal where the L1 wire was connected originally.

5. Close and latch the electrical box, and reconnect the machine to the power source.

Test Run

After all preparation steps have been completed, the machine and its safety features must be tested to ensure correct operation. If you discover a problem with the operation of the machine or its safety components, shut the machine down, disconnect it from power, and do not operate it again until you have resolved the problem.

Note: The variable speed on this machine is controlled by a frequency drive unit constructed with sensitive electronics. These electronics can be damaged if power is disconnected during operation. Therefore, unless the stop button and brake lose functionality, always properly shut the machine down before disconnecting it from the power source.

A **Troubleshooting** section is provided, starting on **Page 74**, to assist you with solutions if a problem occurs or if the lathe does not function as described in this section.

If you need additional help after reviewing the troubleshooting section, or you are not confident troubleshooting the machine on your own, contact our tech support at (360) 734-1540.

To test run your machine:

1. Read and follow the safety instructions at the beginning of the manual, take required safety precautions, and make sure all previous preparation steps discussed in this manual have been followed and completed.

2. Clear away all tools and objects used during assembly, lubrication, and preparation.

3. DISCONNECT LATHE FROM POWER!

4. Make sure that the chuck and jaws, if installed, are secure (refer to **Chuck and Faceplate Mounting** on **Page 27**).

Note: If a chuck is not installed on the lathe, you do not need to install one for this test.

5. Turn the pump switch (**Figure 17**) to the ***OFF*** position, and point the fluid nozzle into the chip drawer.

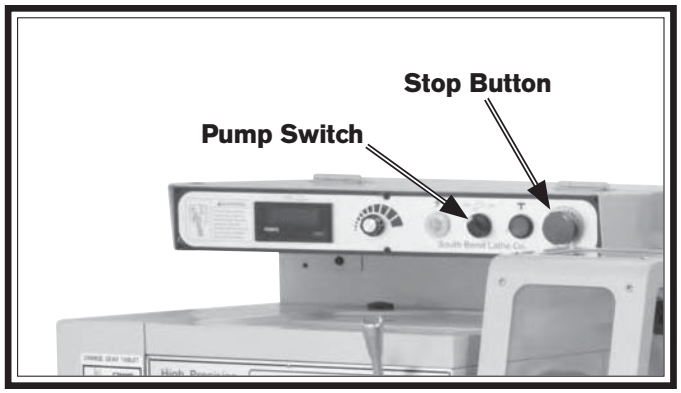

Figure 17. Control panel-test run.

6. Turn the spindle speed dial (**Figure 18**) all the way counterclockwise (lowest speed) to avoid possibility of a high-speed start.

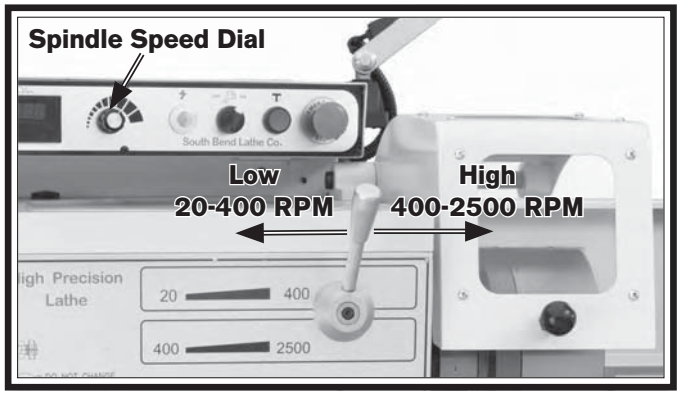

Figure 18. Spindle speed controls.

7. Move the spindle speed range lever (**Figure 18**) to the left so the headstock is set in the low range (20-400 RPM). (You may need to slightly rotate the chuck by hand to engage the lever.)

8. Move the gearbox range lever to the middle (neutral) position, as shown in **Figure 19**.

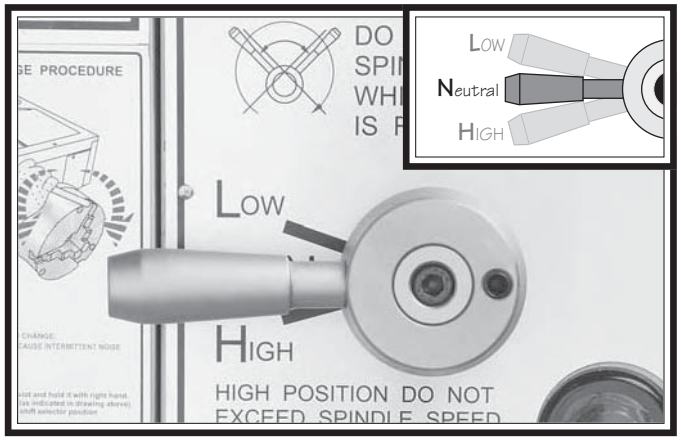

Figure 19. Gearbox range lever in middle position.

9. Move the feed direction forward/reverse lever to the middle (neutral) position, as shown in **Figure 20**.

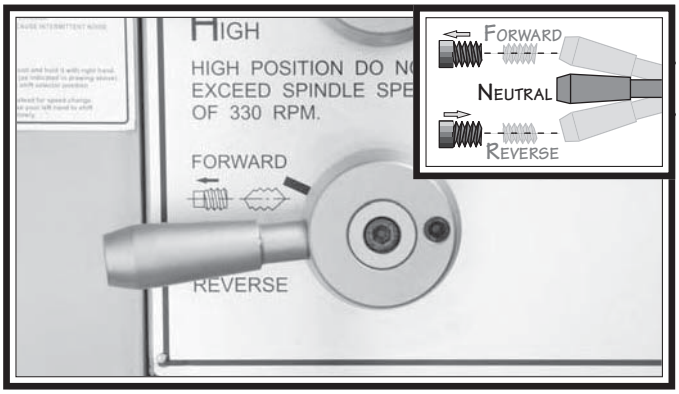

Figure 20. Feed direction forward/reverse lever in the neutral position.

10. Disengage the half nut lever, put the feed control lever in neutral, and make sure the carriage lock bolt is loose (see **Figure 6**).

This step will allow the carriage to move freely when the handwheel is rotated and make sure that the carriage will not move when the lathe is started.

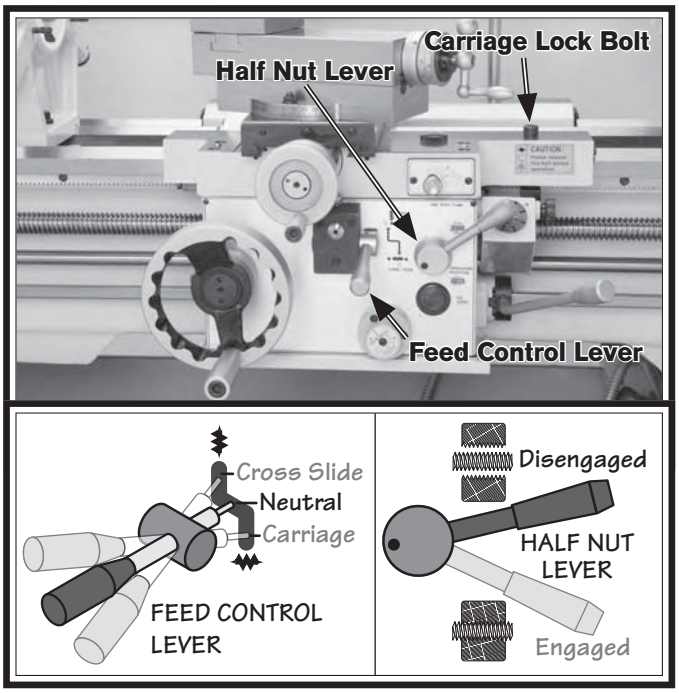

Figure 21. Controls used to disengage carriage so that it will move freely when the handwheel is turned.

11. Move the spindle ON/OFF lever to the ***OFF*** (center) position, as shown in **Figure 22**.

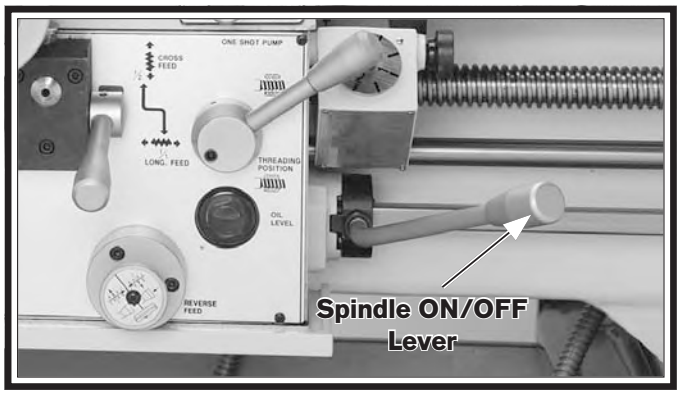

Figure 22. Spindle ON/OFF lever-setup.

12. Connect the lathe to power source, then turn the main power switch (**Figure 23**) to the **ON** position.

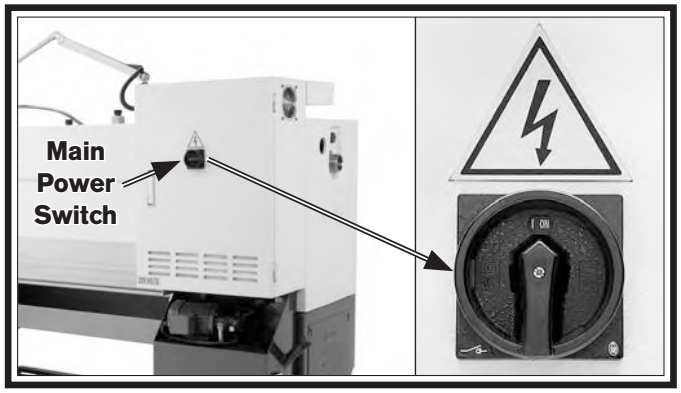

Figure 23. Main power switch in ON position.

13. Rotate the stop button (**Figure 17** on **Page 18**) clockwise until it pops out. The pump will turn ***ON***. Observe the oil pump tube sight glass (**Figure 24**). Verify that you see oil flowing out of the tube and against the sight glass.

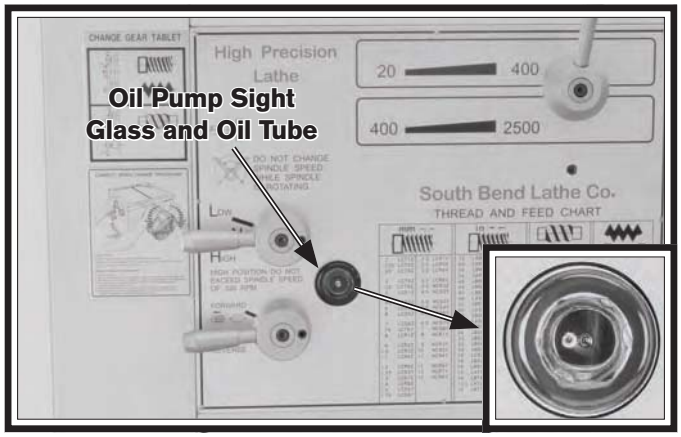

Figure 24. Oil pump sight glass and oil tube.

Note: This headstock has a pressurized oil system that is equipped with an oil pressure safety switch. If oil stops flowing or does not flow to start with, the lathe will not operate until the oil is properly flowing. Refer to **Troubleshooting** to correct.

NOTICE

Never bypass the oil pressure safety switch! If you do, you will void the warranty, and headstock damage may occur.

14. Make sure that all bystanders are out of the way, tools are cleared away, and the chuck key is removed from the chuck.

15. Move the spindle ON/OFF lever (**Figure 25**) down and the chuck will rotate counter-clockwise (down and toward you, as you face the front of the lathe).

Figure 25. Spindle Lever in ON position.

16. Observe the lathe and listen for any abnormal noises or vibration. The lathe should run smoothly with little or no vibration or rubbing noises.

17. Push the stop button. The lathe should stop.

18. Move the spindle ON/OFF lever up to the OFF position, reset the stop button by twisting it clockwise until it pops out, then restart the spindle with the lever.

19. Push the foot brake. The lathe should come to a quick stop.

— If the brake pedal has no effect on the lathe, push the stop button, and refer to **V-Belts** and **Brake & Switch** on **Page 69** to make any required adjustments.

20. Remove the lathe headstock side cover. The kill switch mounted to the headstock should prevent the lathe from starting while this cover is removed.

21. Stand away from all the exposed gears on the side of the headstock, and attempt to start the lathe.

— If the lathe starts, the safety switch is not functioning properly and may need to be replaced before the machine can be safely operated.

22. Replace the headstock side cover, then start the lathe again.

Note: The lathe will not start if the headstock side cover is not properly installed.

23. Turn the cutting fluid pump ***ON***, and open the valve. Verify that fluid flows from the nozzle, then turn the cutting fluid pump ***OFF***.

The test run is now finished. Shut the lathe down and begin the **Spindle Break-In** procedure.

Spindle Break-In

It is essential to closely follow the proper break-in procedures to ensure trouble-free performance. Complete this process once you have familiarized yourself with all instructions in this manual and completed the test run.

To complete the spindle break-in:

1. Successfully complete the **Test Run** procedure beginning on **Page 17**.

2. Move the gearbox range lever to low range position, as shown in **Figure 26**.

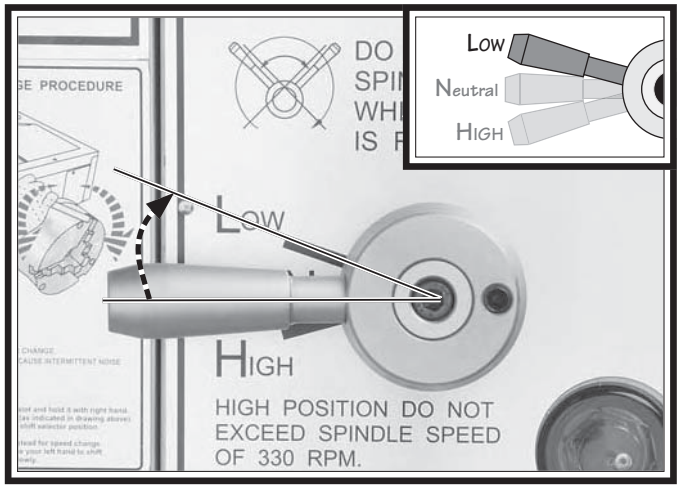

Figure 26. Gearbox range lever-break in.

3. Turn the spindle speed dial (**Figure 27**) all the way counterclockwise to the minimum speed, and move the spindle speed range lever to the low range.

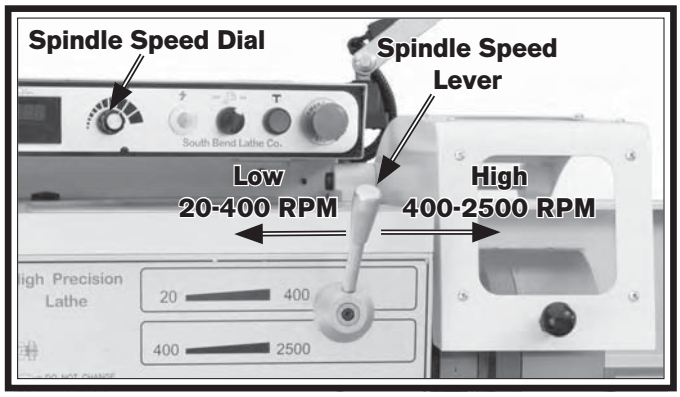

Figure 27. Spindle speed controls.

4. Move the feed direction forward/reverse lever (**Figure 28**) to the neutral position.

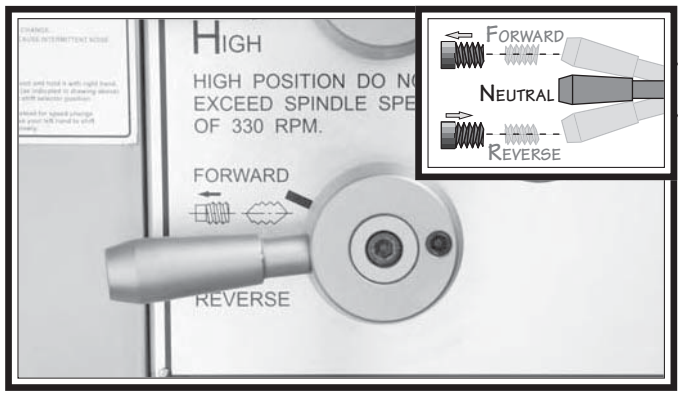

Figure 28. Feed direction lever in neutral position.

NOTICE

Do not leave the lathe unattended during the break-in period. Make sure that you keep a close eye on the headstock oil thermometer (Figure 29) on the oil reservoir. If the headstock oil temperature reaches 160°F, shut the lathe down and let the system cool before resuming break-in.

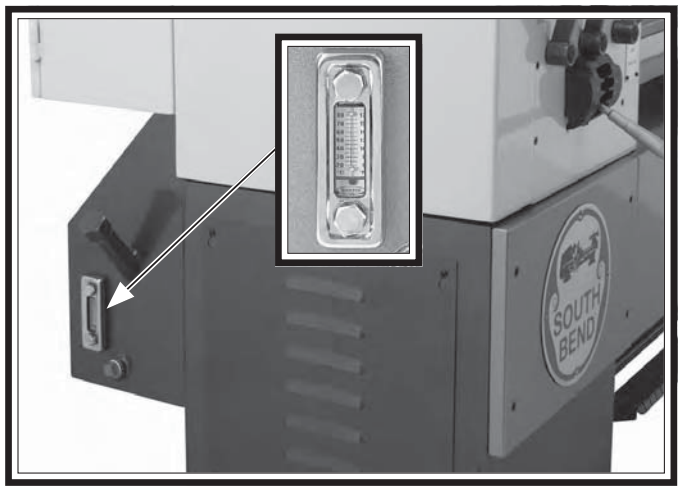

Figure 29. Oil temperature thermometer.

5. Disengage the half nut and the feed control levers shown in **Figures 30–31**.

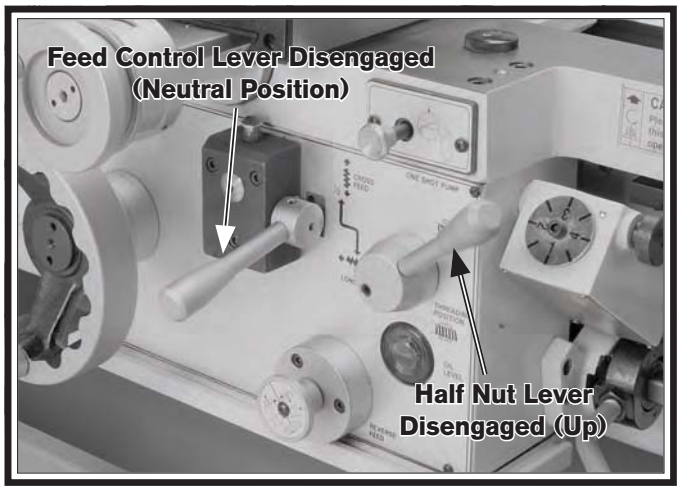

Figure 30. Power fed and half nut levers disengaged.

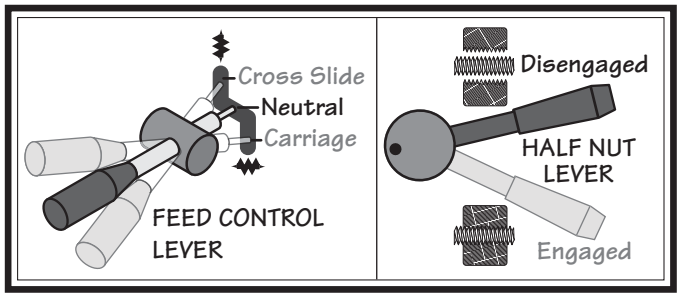

Figure 31. Feed control lever and half nut in disengaged positions.

6. Turn the lathe ***ON,*** and let it run for ten minutes in each speed of 20, 200, and 400 RPM, using the spindle speed dial (**Figure 32**) to adjust the speed.

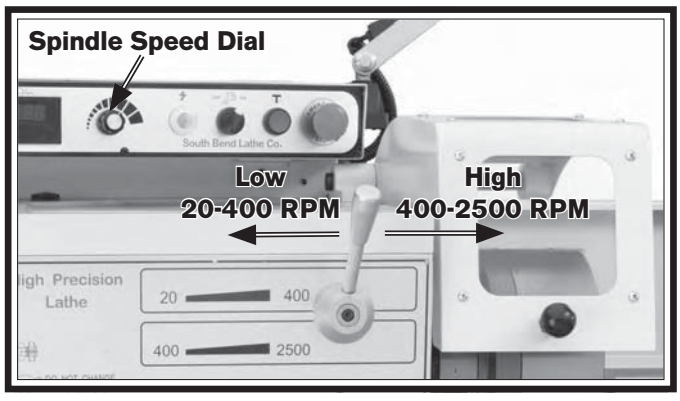

Figure 32. Spindle speed controls.

7. After completing the previous step, stop the spindle and move the gearbox range lever to neutral, then move the spindle speed range lever to high.

8. Turn the lathe ***ON*** and let it run for ten minutes in each speed of 400, 1000, and 2500 RPM.

9. After completing **Step 8**, reduce the spindle speed to 400 RPM and let the lathe run for a final 15 minutes as a cool-down.

10. Turn the lathe ***OFF***.

11. Change the oil in all of the reservoirs, tighten the V-belts, and perform all other lubrication steps mentioned in the **Maintenance** section of this manual.

Recommended Adjustments

For your convenience, the adjustments listed below have been performed at the factory.

However, because of the many variables involved with shipping, we recommend that you at least verify the following adjustments to ensure the best possible results from your new machine.

Step-by-step instructions for these adjustments can be found on the pages referenced below.

Factory adjustments that should be verified:

- Tailstock alignment (**Page 34**).
- Compound and cross slide backlash adjustment (**Page 65**).
- Gib adjustments (**Page 66**).

NOTICE

After the first 16 hours of use, the V-belts will stretch and seat into the pulley grooves. The V-belts must be properly re-tensioned after this period to avoid reducing their useful life. Refer to the V-Belts section on Page 69 for detailed instructions.

Operation Overview

The purpose of this overview is to provide the novice machine operator with a basic understanding of how the machine is used during operation, so they can more easily understand the controls discussed later in this manual.

Note: Due to the generic nature of this overview, it is not intended to be an instructional guide for performing actual machine operations. To learn more about specific operations and machining techniques, seek training from people experienced with this type of machine, and do additional research outside of this manual by reading "how-to" books, trade magazines, or websites.

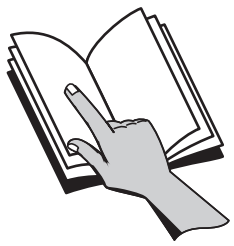

⚠WARNING

To reduce the risk of serious injury when using this machine, read and understand this entire manual before beginning any operations.

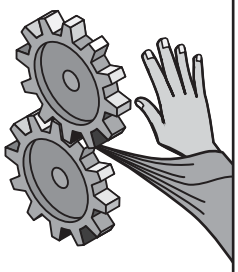

⚠WARNING

Loose hair, clothing, or jewelry could get caught in machinery and cause serious injury or death. Keep these items away from moving parts at all times to reduce this risk.

⚠WARNING

During operation, small metal chips may become airborne, leading to serious eye injury. Wear safety glasses to reduce this risk.

To complete a typical operation, the operator does the following:

1. Puts on safety glasses, rolls up sleeves, removes jewelry, and secures any clothing, jewelry, or hair that could get entangled in moving parts.
2. Examines the workpiece to make sure it is suitable for turning, then mounts the workpiece in one of the chucks or on the faceplate, and removes the chuck key from the chuck.
3. Mounts the tooling, aligns it with the workpiece, then backs it away to establish a safe startup clearance.
4. Clears all tools from the lathe.
5. Sets the correct spindle speed range for the operation, and turns the spindle speed dial all the way counterclockwise (to the lowest speed) to avoid the possibility of damage from a high speed start.
6. Checks for safe clearances by rotating the workpiece by hand at least one full revolution.
7. Moves slides to where they will be used during operation.
8. If using power feed, selects the proper feed rate for the operation.
9. Turns the main power switch ***ON***, resets the stop button so it pops out, then moves the spindle ON/OFF lever down to start spindle rotation. The spindle will rotate counterclockwise (down and toward the operator when facing the front of the lathe).
10. Turns the spindle speed dial clockwise to the desired RPM.
11. Uses the carriage handwheels or power feed options to move the tooling into the workpiece for operations.
12. When finished cutting, moves the ON/OFF lever to the center position to turn the lathe ***OFF***, then removes the workpiece.

Description of Controls & Components

Refer to the following figures and descriptions to become familiar with the basic controls of this machine.

Main Power Switch

The main power switch is shown in **Figure 33**. It turns master power ***ON/OFF*** to the lathe.

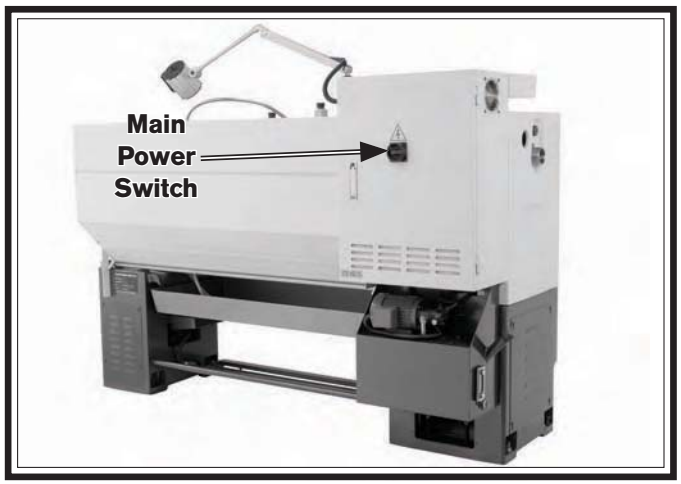

Figure 33. Main power switch.

Headstock Controls

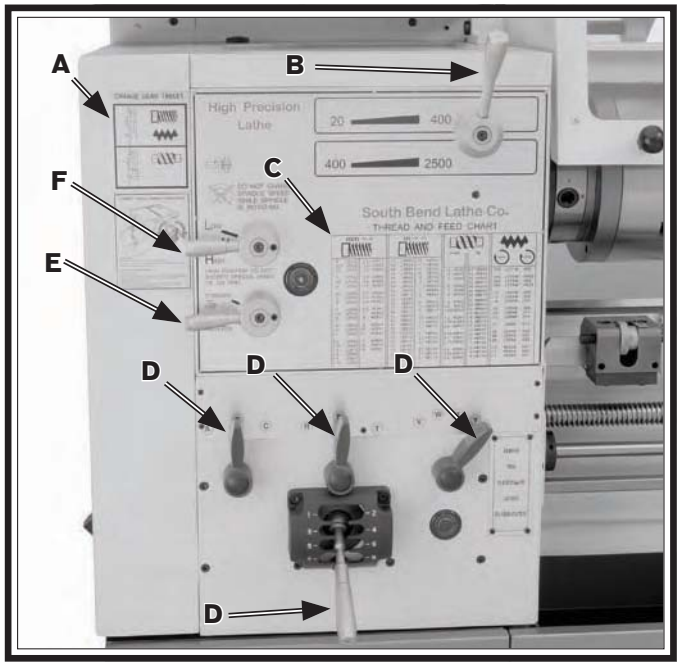

Figure 34. Headstock controls.

A. Change Gear Chart: Displays the positions of the various gears for different threading or turning options.

B. Spindle Speed Range Lever: Shifts the headstock into low or high range for spindle speeds between 20–400 RPM or 400–2500 RPM.

C. Thread and Feed Chart: Shows the configurations of the gearbox levers to achieve a particular feed rate.

D. Gearbox Levers: Move the gearbox gears into particular ratios, which then turn the leadscrew and feed rod for threading and power feed operations.

E. Feed Direction Lever: Shifts the direction that the gearbox is turning, which changes the direction of the leadscrew and feed rod.

F. Gearbox Range Lever: Shifts the gearbox between high, neutral, or low range and has no effect on spindle RPM.

Carriage Controls

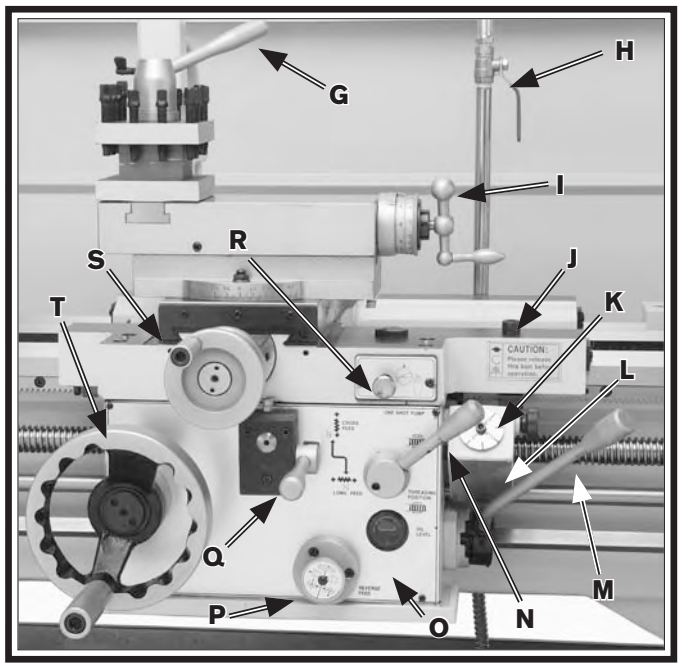

Figure 35. Carriage controls.

G. 4-Position Tool Post Lever: Locks the rotary tool post in four possible detents.

H. Cutting Fluid Flow Control Lever: Controls the flow of cutting fluid from the nozzle.

I. Compound Slide Handwheel: Moves the compound slide forward or backward. Includes an indirect-read graduated scale (distance represents actual tool movement—not amount of material removed).

J. Carriage Lock Bolt: Secures the carriage in place for greater rigidity and accuracy when using the cross or compound slide for the machining operation.

K. Thread Dial: Indicates when to engage the half nut during threading operations.

L. Thread Dial Chart: Indicates on which thread dial reading to engage the half nut for specific inch or Whitworth thread pitches.

M. Spindle ON/OFF Lever: Starts, stops and reverses direction of spindle rotation.

N. Half Nut Lever: Engages and disengages the half nut for threading operations.

O. Apron: Houses the carriage gearing and internal components.

P. Quick Change Feed Direction Knob: Changes apron feed direction without having to stop the lathe and move the headstock feed direction lever.

Q. Feed Control Lever: Engages and disengages the cross feed and carriage feed gearing.

R. Manual Carriage Oil Pump: Draws oil from the apron case and lubricates the carriage and ways through various oil ports.

S. Cross Slide Handwheel: Moves the cross slide toward or away from the workpiece. Includes an direct-read graduated scale (distance represents amount of material removed from diameter of workpiece).

T. Carriage Handwheel: Moves the carriage from side-to-side along the bed.

Control Panel

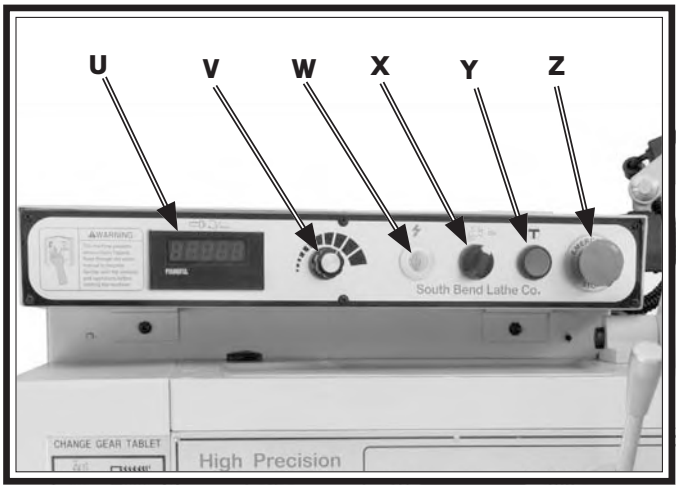

Figure 36. Control panel.

U. Tachometer Display: Displays the current spindle speed in RPM.

V. Spindle Speed Dial: Changes the spindle speed within the set speed range.

W. Power Light: Illuminates when lathe is receiving power.

X. Cutting Fluid Pump Switch: Start/stops the cutting fluid pump motor.

Y. Jog Button: Turns the spindle motor ***ON*** while being pressed and held.

Z. Emergency Stop Button: Stops all machine functions. Twist clockwise to reset.

Tailstock Controls

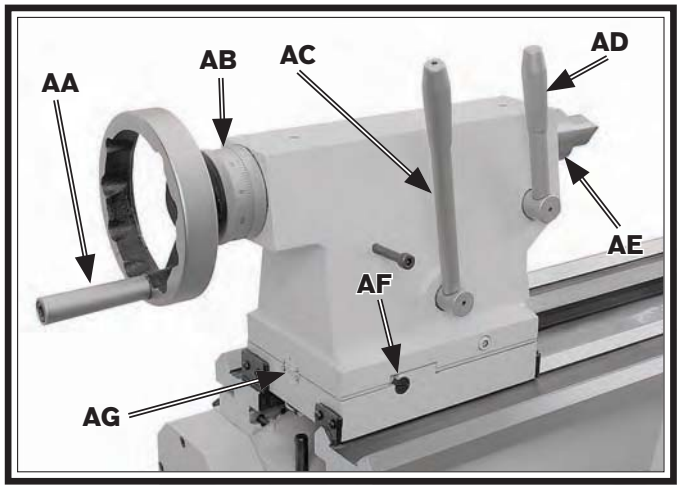

Figure 37. Tailstock controls.

AA. Quill Handwheel: Moves the quill toward or away from the spindle.

AB. Graduated scale: Indicates quill movement in increments of 0.001" or 0.02mm.

AC. Tailstock Lock Lever: Secures the tailstock in place along the bedway.

AD. Quill Lock: Locks the quill in position.

AE. Quill: Moves toward and away from the spindle and holds centers and tooling.

AF. Tailstock Offset Screw: Adjusts and secures the tailstock offset (1 of 2).

AG. Offset Scale: Indicates the distance of tailstock offset from the spindle center line.

Foot Brake

This lathe is equipped with a foot brake (**Figure 38**) to quickly stop the spindle. Pushing the foot brake while the spindle is ***ON*** cuts power to the motor and stops the spindle. Once stopped, the spindle lever MUST be returned to the neutral position before the spindle can be restarted.

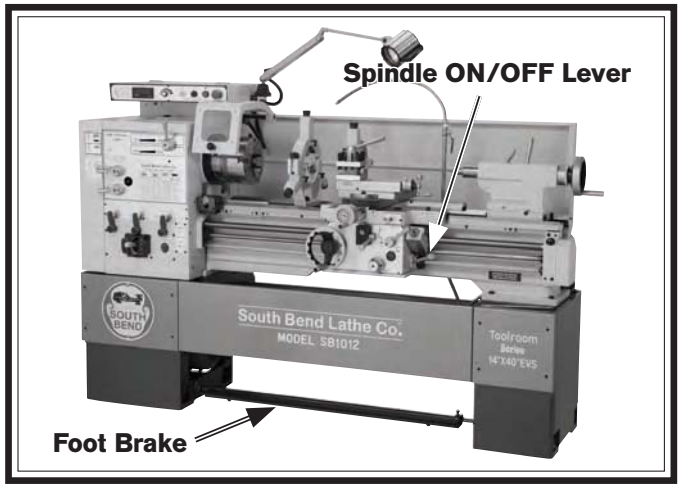

Figure 38. Foot brake and spindle ON/OFF lever.

⚠WARNING

Using the foot brake to stop the lathe reduces risk of an entanglement injury from allowing the lathe to coast to a stop. Use the foot brake to stop the lathe whenever possible.

Chuck & Faceplate Mounting

This lathe is shipped with the 3-jaw chuck installed. This is a scroll-type chuck, meaning that all three jaws move in unison when adjusted.

The included 4-jaw chuck features independent jaws, which are used for square or unevenly-shaped stock, and to mount work that needs to be adjusted to near "0" total indicated runout.

If neither chuck can hold your workpiece, the cast-iron faceplate has slots for T-bolts that hold standard or custom clamping hardware. With the correct clamping hardware, this faceplate will hold non-cylindrical parts.

The chucks and faceplate have a D-6 camlock mount. A chuck key is used to turn the locking cams (**Figure 40**) to secure/release the chuck/faceplate.

Items Needed	Qty
Dead Blow Hammer	1
Chuck Cradle or Plywood ¾" (to protect bed)	1
Chuck Key	1

Removing Chuck or Faceplate

1. DISCONNECT LATHE FROM POWER!

2. Lay a chuck cradle (see **Figure 39**) or plywood under the chuck or faceplate and over the bedway to protect the precision ground surfaces from damage and reduce injury if fingers get pinched.

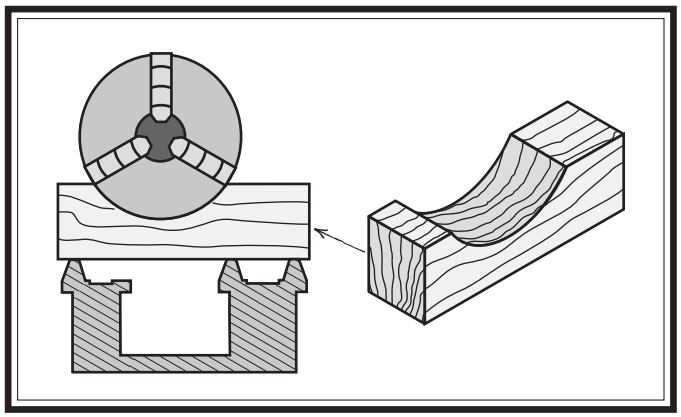

Figure 39 Wooden chuck support cradle.

3. One at a time, use the chuck key to turn each of the camlocks counterclockwise until the cam line aligns with the cam release datum line, as shown in **Figure 40**. As you turn the camlocks, they will rise up slightly from the spindle body.

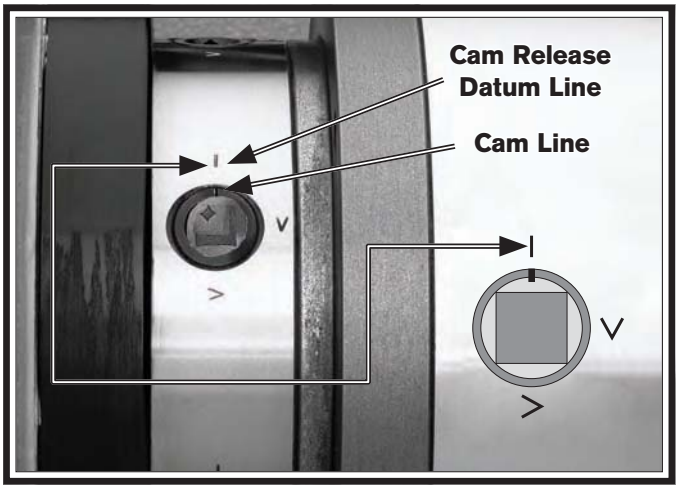

Figure 40. Camlock loosened with the cam line aligned with the datum line.

4. Remove the chuck key, then use a dead-blow hammer or a wood block to lightly tap around the circumference of the chuck or faceplate to break it free from the spindle taper and camlock sockets. Be sure to support the bottom of the chuck.

5. With a rocking motion, carefully remove the chuck or faceplate from the spindle nose, as shown in **Figure 41**, making sure to support the weight with an adequate chuck cradle.

Figure 41. Example of removing a 3-jaw chuck from a spindle nose.

Mounting Chuck or Faceplate

The 4-jaw chuck is shipped with six camlock studs that must be installed before the chuck can be mounted, as explained in this procedure. If you have not yet installed the camlock studs, complete the instructions in "Installing and Adjusting Camlock Studs" on **Page 29**.

To mount a chuck or faceplate:

1. DISCONNECT LATHE FROM POWER!

2. Lay a chuck cradle (see **Figure 39**) or plywood under the chuck or faceplate and over the bedway to protect the precision ground surfaces from damage and reduce injury if fingers get pinched.

3. Clean away debris and oily substances from the mating surfaces of the spindle and chuck or faceplate.

4. Inspect and make sure that all camlock studs are undamaged, are clean and lightly oiled, and that the camlock stud cap screws are in place and snug.

NOTICE

Never install a chuck or faceplate without having the camlock cap screws in place or fully tightened. If you ignore this notice, the chuck may not be removable since the camlock studs may turn with the camlocks and never release.

5. Position the chuck/faceplate in front of the spindle nose, align the chuck timing marks, as shown in **Figure 42**, and align the camlock studs with the sockets, then carefully insert the chuck or faceplate onto the spindle.

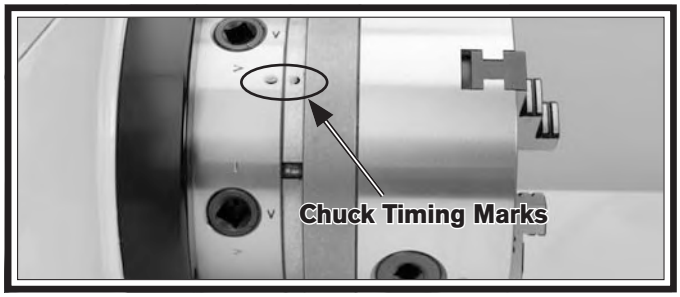

Figure 42. Chuck timing marks aligned.

6. Tighten camlocks in a star pattern to draw the chuck up evenly on all sides while reducing chance of alignment, and make sure to tighten camlocks in an incremental manner to ensure that no camlock gets fully tightened all at once (i.e., snug the camlocks on the first pass, then moderately tighten on the next pass, then fully tighten on the third pass).

   As you tighten the camlocks, the chuck or faceplate will snug up onto the spindle nose. When fully tightened, the cam line will fall between the two "V" marks on the spindle nose, as shown in **Figure 43**.

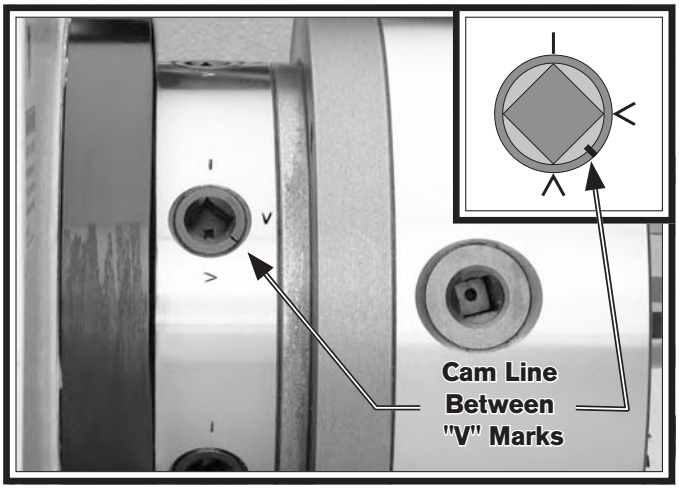

Figure 43. Camlock fully tightened with the line between the "V" marks.

Note: If any of the cam lines do not fall between the "V" marks when the camlock is tight, you must adjust the offending camlock stud as discussed in **Installing and Adjusting Camlock Studs** on **Page 29**.

To make sure that the chuck or faceplate is perpendicularly aligned with the spindle, use a test indicator mounted on the bedways to check for runout.

Installing and Adjusting Camlock Studs

When fitting a chuck or faceplate with camlock studs, or when mounting a new chuck or faceplate, it may be necessary to install or adjust the camlock studs.

Tool Needed	Qty
Hex Wrench 6mm	1

To install or adjust camlock studs onto a chuck or faceplate:

1. Lay the chuck or faceplate upside down on a protective, flat surface.

2. If installed, remove the locking cap screw adjacent to each of the six cam-lock mounting holes (see **Figure 44**).

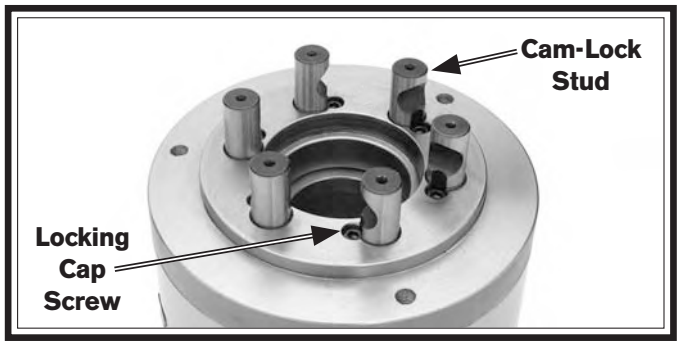

Figure 44. Identifying chuck camlock studs and locking cap screws.

3. Thread each cam-lock stud into the chuck or faceplate until the depth mark shown in **Figure 45** is even with the surface of the chuck or faceplate and the curved indent on the side of the stud faces the locking cap screw hole, as shown in **Figure 46**. This is an initial adjustment.

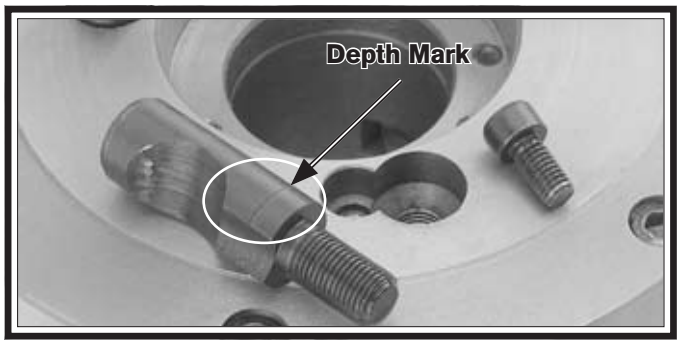

Figure 45. Example of camlock stud depth mark.

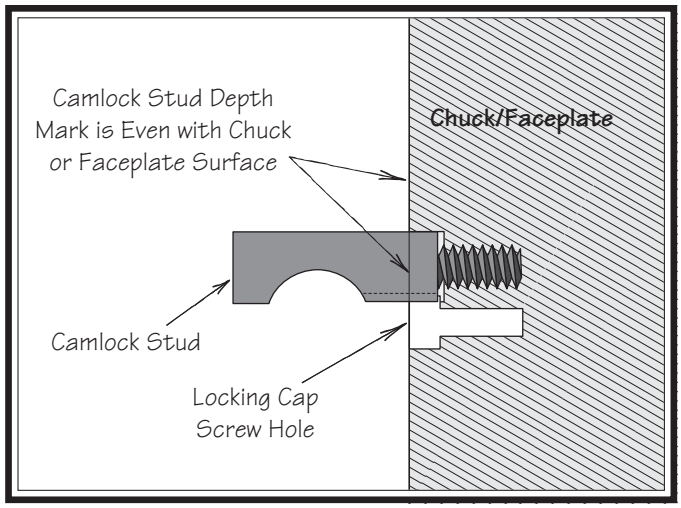

Figure 46. Initial adjustment of camlock stud.

4. Install and tighten the locking cap screws.

5. Make sure that the cam-lock studs can rotate back and forth against the head of the locking cap screw (see **Figure 47**).

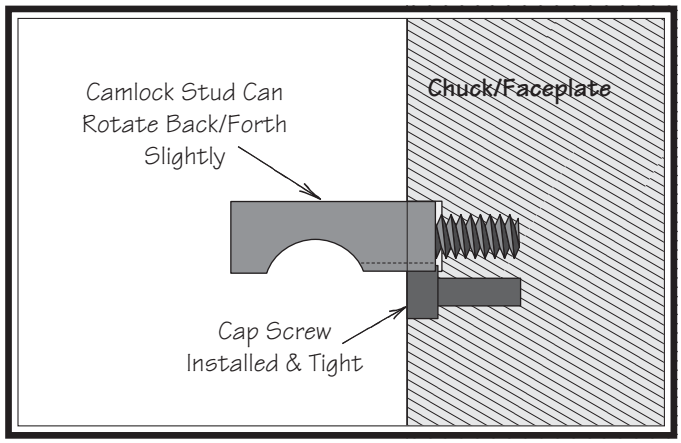

Figure 47. Camlock stud and cap screw correctly installed.

6. Insert the chuck onto the spindle, then check the position of each camlock, making sure the cam line points between the "V" marks.

   — If one or more of the cams do not point between the "V" marks on the chuck, remove the chuck, and fine tune the camlock stud adjustment by adjusting the stud in or out and using **Figure 48** on the following page as a guide to correctly position the cam lines.

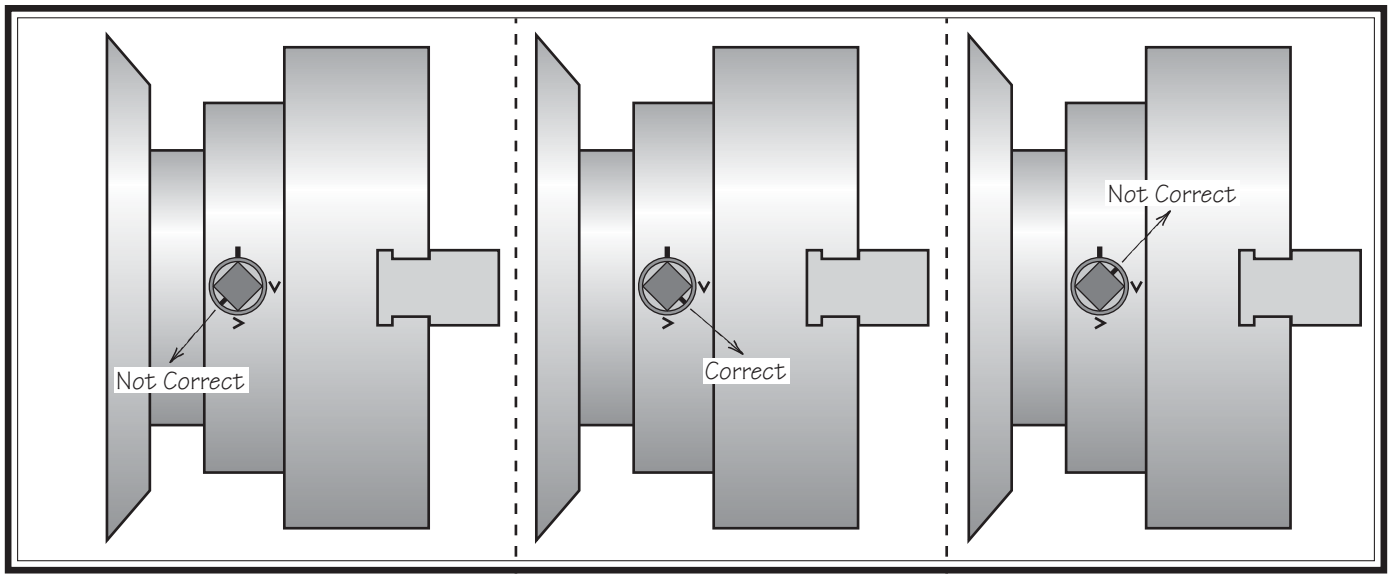

Figure 48. Correct camlock stud alignment.

3-Jaw Chuck

Refer to **Chuck & Faceplate Mounting** instructions on **Page 27** to mount the 3-jaw chuck to the spindle.

The 3-jaw scroll-type chuck included with this lathe features hardened steel jaws that center the workpiece. When the operator opens or closes the jaws with the chuck key, the jaws move in unison.

There are two sets of removable hardened steel jaws included with the 3-jaw chuck—inside and outside jaws. Use the correct jaws for the size and configuration of the workpiece to hold it firmly and securely on the chuck (see **Figure 49**). The outside of the jaws are used to hold the workpiece from the outer diameter.

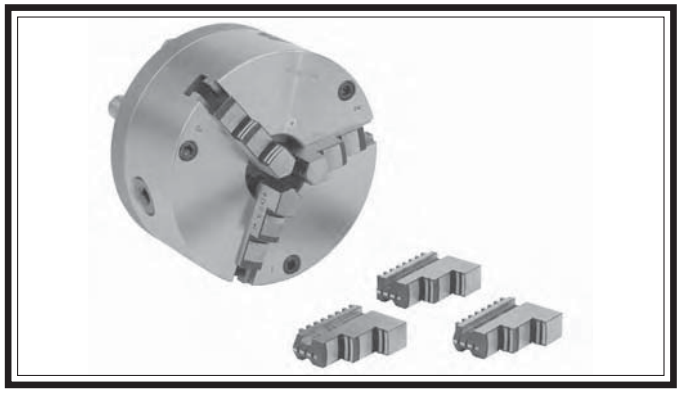

Figure 49. Chuck and jaw selection.

Numbered from 1–3, the jaws must be used in the matching numbered jaw guides, as shown in **Figure 50**.

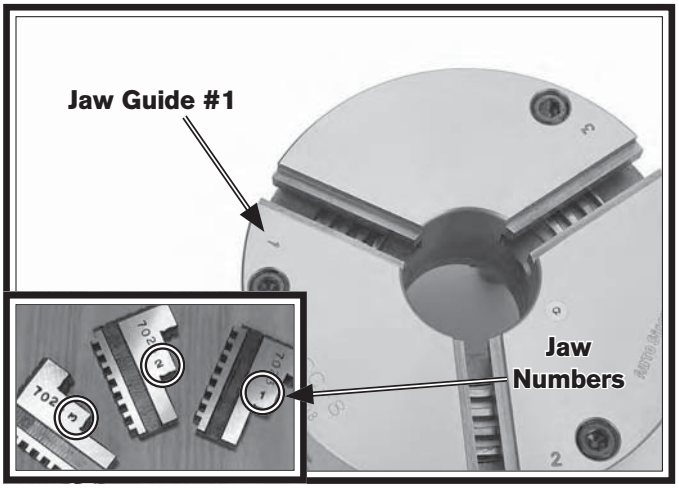

Figure 50 Jaw guides and jaw numbers.

Note: The chuck does not need to be removed from the spindle to swap the jaws.

Changing Jaws

Item Needed	Qty
Chuck Key	1
White Lithium Grease	As Needed

To change the jaw:

1. DISCONNECT LATHE FROM POWER!

2. Place a piece of wood over the ways to protect them from potential damage.

3. Insert the chuck key and turn it counterclockwise to back the jaws out and remove them.

4. Clean the jaw mating surfaces and apply a thin film of white lithium grease to the mating surfaces.

5. Set the previously mounted jaws aside in a safe place free of moisture and abrasives.

6. Rotate the chuck key clockwise until you see the tip of the scroll gear lead thread just begin to enter jaw guide #1 (see **Figure 51**).

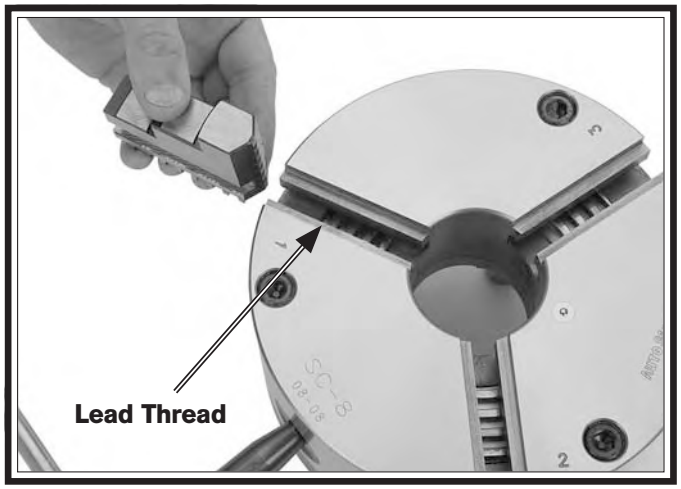

Figure 51. Inserting jaw guide #1.

7. Insert jaw #1 into jaw guide #1 and hold the jaw against the scroll gear lead thread.

8. Rotate the chuck key clockwise one turn to engage the tip of the scroll gear lead thread into the jaw. Pull on the jaw—now it should be locked into the jaw guide.

9. Repeat the **Steps 6–8** on the remaining jaws.

   — If installed correctly, the jaws converge together at the center of the chuck.

   — If the jaws do not come together, remove them, then repeat this procedure until they do.

Mounting Workpiece

Items Needed	Qty
Chuck Key	1
Chuck Cradle or Plywood ¾" (to protect bed)	1

To mount a workpiece in the 3-jaw chuck:

1. DISCONNECT LATHE FROM POWER!

2. If the workpiece is large and heavy, place a chuck cradle or plywood on the bedway below the chuck to protect it.

3. Use the chuck key to move the jaws and mount the workpiece into the chuck (refer to **Figure 52** for typical mounting methods).

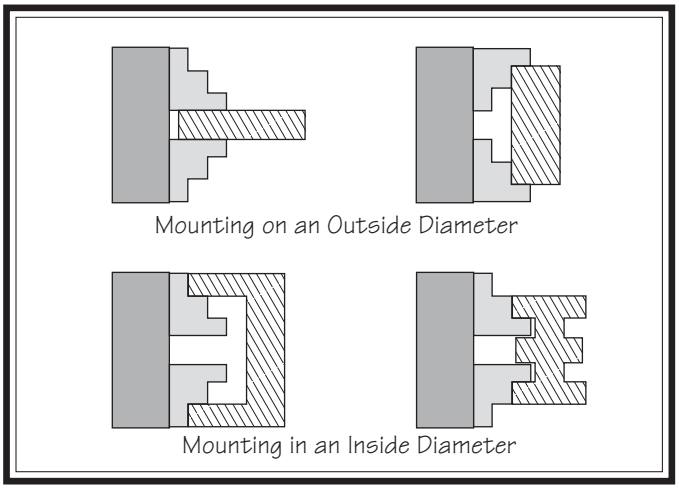

Figure 52. Typical of 3-jaw chuck mounting methods.

4. Rotate the chuck by hand to make sure the workpiece makes even contact with all three jaws and spins evenly without any visible wobble.

   — If the workpiece is not evenly held or is off-center, repeat **Steps 3–4**.

5. After verifying that the workpiece is properly centered, fully tighten the jaws to make sure the workpiece is held securely, so it will not come loose during operation.

4-Jaw Chuck

Refer to **Chuck & Faceplate Mounting** instructions on **Page 27** to mount the 4-jaw chuck to the spindle.

The 4-jaw chuck features independently adjustable hardened steel jaws to hold non-cylindrical or off-center workpieces. Each jaw can be removed from the chuck body and reversed for a wide range of work holding versatility.

Mounting Workpiece

Items Needed	Qty
Chuck Key	1
Chuck Cradle or Plywood ¾" (to protect bed)	1

To mount a workpiece on the 4-jaw chuck:

1. DISCONNECT LATHE FROM POWER!

2. Place a chuck cradle or plywood on the bedway below the chuck to protect it.

3. Use the chuck key to open each jaw so the workpiece will lay flat against the chuck face or jaw steps.

4. With help from another person or a supporting device, mount the workpiece centered on the chuck, then turn each jaw until it makes contact with the workpiece.

5. Tighten each jaw in small increments. After you have adjusted the first jaw, continue tightening in an opposing sequence, as shown in **Figure 53**.

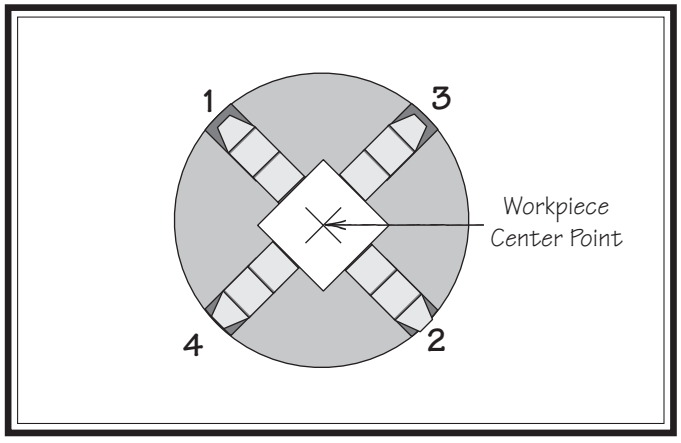

Figure 53. 4-jaw tightening sequence.

6. After the workpiece is held in place by the jaws, turn the chuck by hand and pay attention to the workpiece alignment.

   — If the workpiece is not correctly aligned for your operation as you turn the chuck, make fine adjustments by slightly loosening one jaw and tightening the opposing jaw until the workpiece is correctly aligned (see **Figure 54** for an example).

Figure 54. Example of non-concentric workpiece correctly mounted on the 4-jaw chuck.

Tailstock

The tailstock (**Figure 55**) on your lathe can be used to support workpieces with the use of a live or dead center (refer to **Centers** on **Page 37**). It can also be used to drill or bore holes in the center of a part or cut shallow tapers by using the offset adjustment.

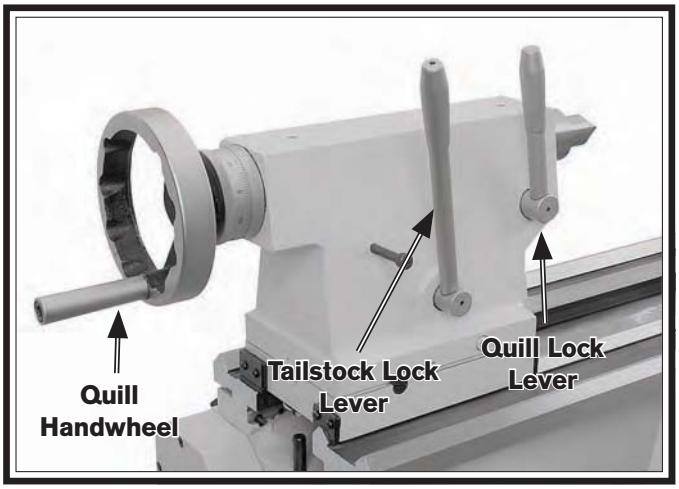

Figure 55. Tailstock and quill lock handles in locked position.

Moving Along Bedway

1. Pull the tailstock lock lever backward (away from the spindle) to unlock the tailstock from the bedway.

2. Slide the tailstock to the desired position.

3. Push the tailstock lock lever forward (toward the spindle) to lock the tailstock to the bedway.

Using Quill

1. Release the quill lock lever.

2. Turn the quill handwheel clockwise to move the quill towards the spindle, or turn counterclockwise to move the quill away from the spindle.

3. Push the quill lock forward to lock the quill in place.

Installing Tooling

The tailstock quill can hold live or dead centers (refer to **Mounting Center in Tailstock** on **Page 38**) or any MT#4 taper tooling, such as a chuck arbor or tapered drill bit (see **Figure 56**).

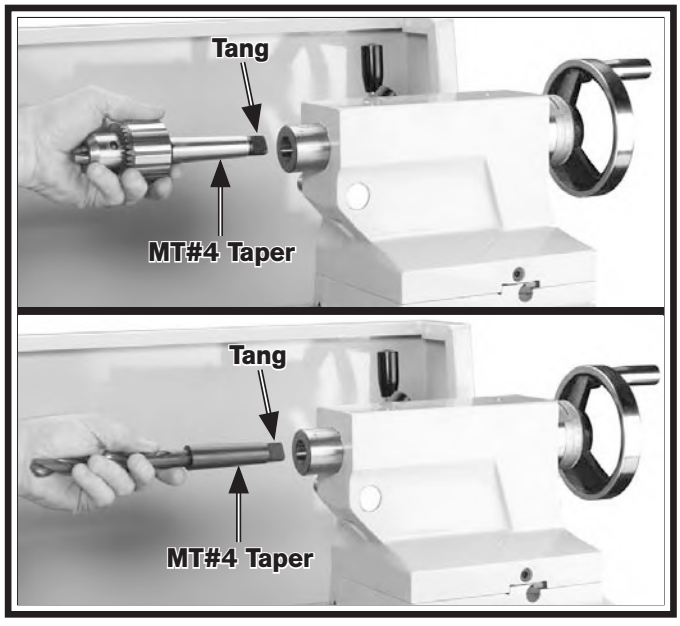

Figure 56. Inserting drill chuck arbor or tapered drill bit into tailstock.

To install tooling in the tailstock:

1. With the tailstock locked in place, unlock the quill, then use the handwheel to extend it to the 1" mark on the quill.

2. Insert the drill chuck arbor or drill shank into the quill, then quickly slap it in. Try to twist the tool to check if it is firmly seated. A firmly seated taper will not twist.

Note: If the tapered shaft has a tang, align it horizontally with the indent in the back of the quill before fully inserting it.

3. Unlock the tailstock and move it until the tip of the cutting tool is close to, but not touching, the workpiece, then re-lock the tailstock.

4. Start spindle rotation, unlock the quill, then turn the quill handwheel clockwise to feed the cutting tool into the workpiece.

Removing Tooling

1. Use a shop rag to hold the tool.

2. Rotate the tailstock quill handwheel counterclockwise until the tool is forced out of the quill.

Offsetting

The tailstock can be offset from the spindle center line for turning tapers. The offset movement is controlled by set screws on both sides of the tailstock (see **Figure 57**), and the amount of movement is indicated by the offset scale on the back of the tailstock.

Note: For a precise offset, use a dial indicator to check quill movement while adjusting screws.

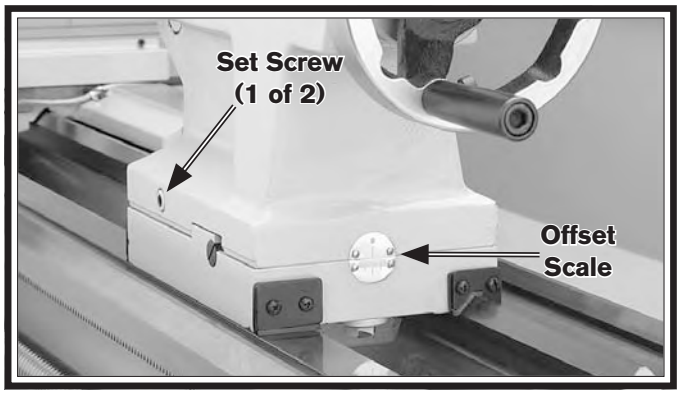

Figure 57. Tailstock offset controls.

Tool Needed **Qty**
Hex Wrench 6mm 1

To offset the tailstock from the spindle center line, loosen the clamp bolts underneath the tailstock to relieve pressure on the sliding components, then rotate the set screws in the direction shown in **Figure 58**.

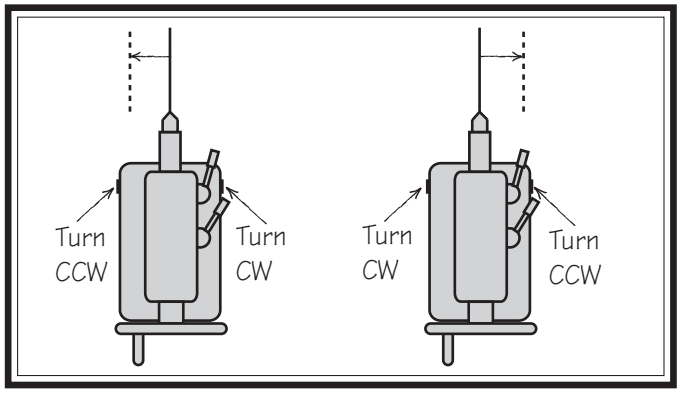

Figure 58. Set screw adjustment in relation to tailstock movement.

Once the tailstock is offset where needed, tighten the clamp bolts underneath the tailstock.

Aligning

The offset of your lathe was aligned with the spindle center line at the factory. We recommend that you take the time to ensure that the tailstock is aligned to your own desired tolerances, especially if you have changed the offset to cut shallow tapers.

To align the tailstock offset to the spindle center line:

1. Use a precision level to make sure the bedway is level from side-to-side and from front-to-back.

   — If the bedway is not level, correct this condition before continuing with this procedure.

2. Obtain two pieces of steel round stock 2" in diameter and 6" long.

3. Center drill both ends of one piece of round stock, then set it aside for use in **Step 6**.

4. Use the other piece of round stock to make a dead center, and turn it to a 60° point, as shown in **Figure 59**.

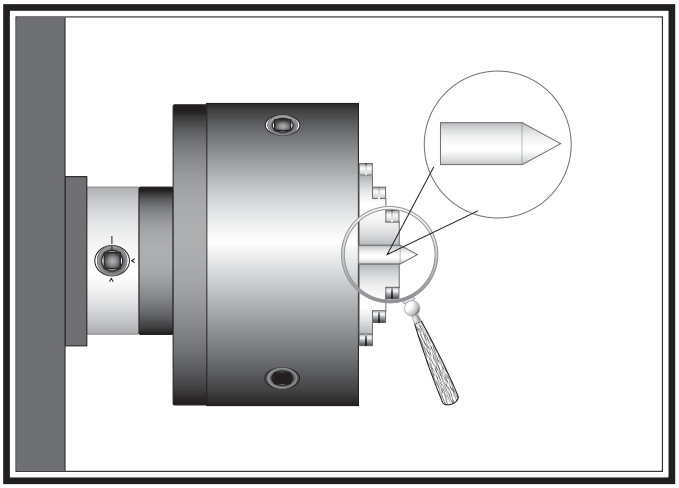

Figure 59. Turning a dead center.

Note: As long as this dead center remains in the chuck, the point of the center will remain true to the spindle center line. The point will have to be refinished whenever the center is removed and then returned to the chuck.

5. Install a center in the tailstock.

6. Attach a lathe dog to the piece of stock from **Step 3**, then mount it between the centers, as shown in **Figure 60**.

Figure 60. Example of round stock mounted between the centers.

7. Turn 0.010" off the diameter of the stock.

8. Mount a test or dial indicator so that the plunger is on the tailstock quill.

Note: If necessary in the following step, refer to "To Set Up the Tailstock to Cut a Shallow Taper" on **Page 34** for adjusting the tailstock offset.

9. Use a caliper to measure both ends of the workpiece.

— If the machined workpiece is *thicker* at the tailstock end, move the tailstock toward the *front* of the lathe ½ the distance of the amount of taper (see **Figure 61**).

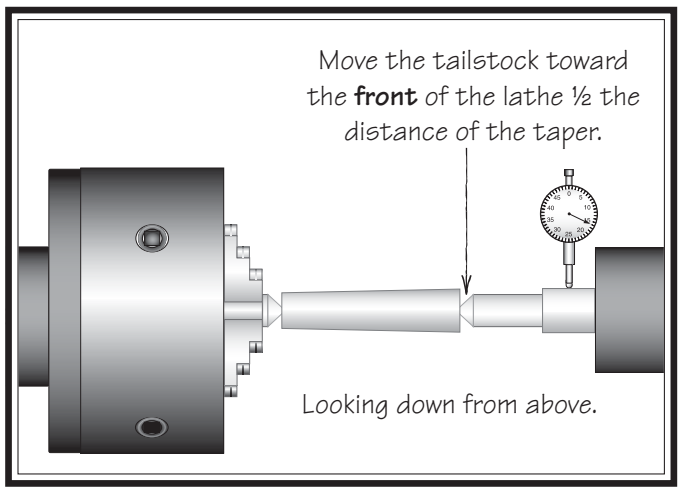

Figure 61. Adjust tailstock toward the operator.

— If the machined workpiece is *thinner* at the tailstock end, move the tailstock toward the *back* of the lathe ½ the distance of the amount of taper (see **Figure 62**).

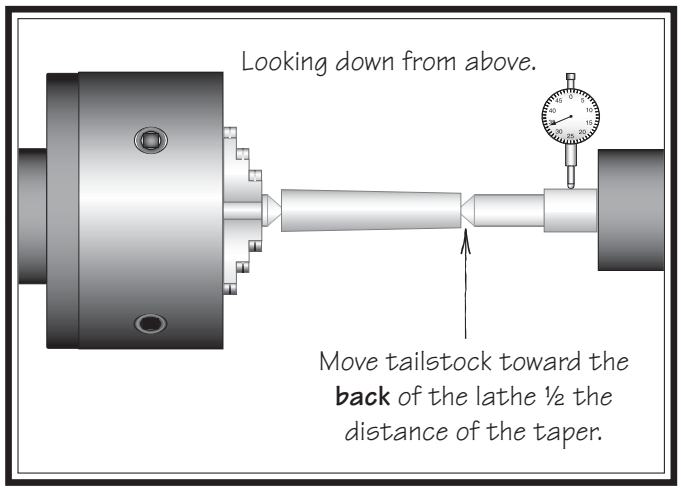

Figure 62. Adjust tailstock away from the operator.

10. Repeat **Steps 7–9** until the desired accuracy is achieved.

Faceplate

Refer to **Chuck & Faceplate Mounting** instructions on **Page 27** to mount the faceplate to the spindle.

The 12" faceplate included with your lathe offers a wide range of uses, including machining non-concentric workpieces, straight turning between centers, off-center turning, and boring.

The tools needed for mounting a workpiece will vary depending on the type of setup you have.

⚠WARNING

Failure to properly secure a workpiece to the faceplate could cause the workpiece to be thrown from the lathe with deadly force at the operator or bystanders. Use a minimum of three independent clamping devices to hold a non-concentric workpiece onto the faceplate.

⚠WARNING

Machining non-concentric workpieces at a high speed could cause the workpiece to be thrown from the spindle with deadly force at the operator or bystanders. To reduce this risk, only machine non-concentric workpieces at low speeds and clamp counter-weights to the faceplate to balance it.

Mounting Workpiece with Clamps

1. DISCONNECT LATHE FROM POWER!

2. Place a piece of ¾" plywood on the bedway below the spindle.

3. With help from another person, place the workpiece onto the faceplate and clamp it in place with a minimum of three independent clamping devices (see **Figure 63** for an example).

Note: Be sure to take into account the rotation and cutting forces that will be applied to the workpiece when clamping it to the faceplate.

4. Double check tool and slide motion clearances before turning spindle ***ON***.

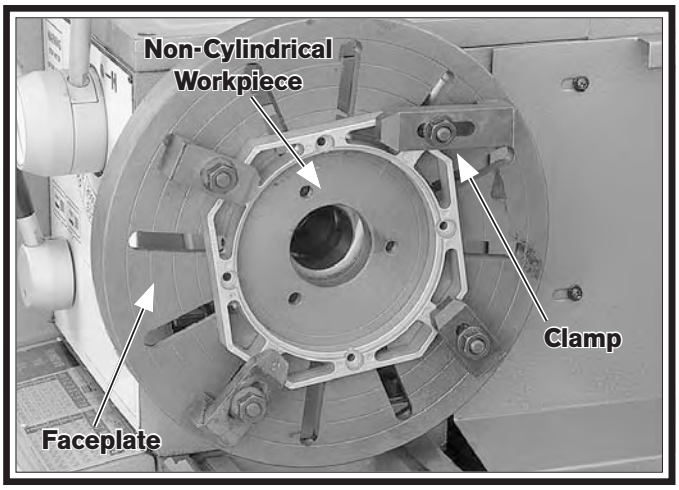

Figure 63. Example of workpiece clamped in a faceplate.

Mounting Workpiece Between Centers

1. DISCONNECT LATHE FROM POWER!

2. Drill center holes in both ends of the workpiece.

3. Install the dead center in the spindle and the live center or carbide-tipped dead center in the tailstock (refer to **Page 37**).

4. Secure a lathe dog on the spindle-end and place a drop of oil in the center hole on the tailstock-end of the workpiece.

5. Mount the workpiece between centers so the lathe dog tail fits freely in the faceplate slot without binding.

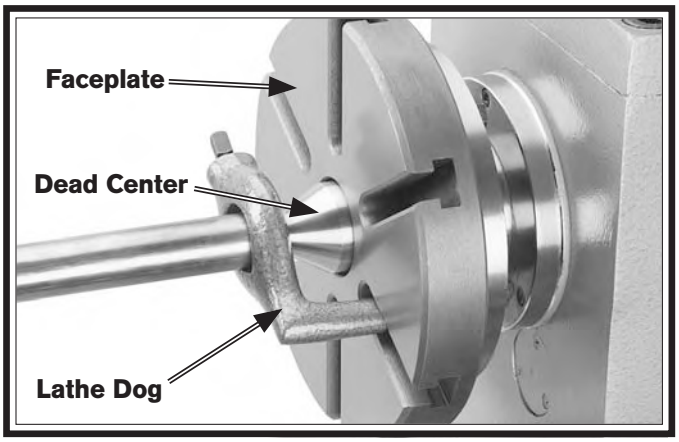

Figure 64. Example of using faceplate to mount work between centers.

Centers

Figure 65 shows the dead centers included with the lathe. In addition, an MT#6–MT#4 tapered spindle sleeve is included for mounting centers in the spindle.

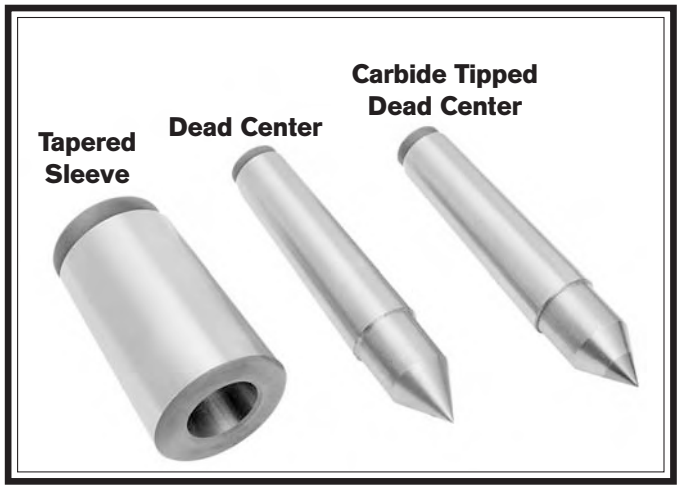

Figure 65. Tapered sleeve and dead centers.

Dead Centers

The dead center achieves more accurate results than a live center, but it requires low spindle speeds and a small amount of oil to reduce friction heat that may damage the workpiece.

Use the dead center in the spindle, because the workpiece does not rotate on the tip and does not generate friction.

Use the carbide-tipped dead center in the tailstock where the workpiece will rotate against it and generate friction. The carbide-tipped dead center can better withstand the effects of friction; however, the tip of the center must be lubricated to avoid premature wear and maximize smooth operation. Also, using low spindle speeds will reduce the heat and wear from friction.

Live Centers

A live center has bearings that allow the center tip and the workpiece to rotate together, and can be installed in the spindle and the tailstock quill for higher speeds.

Mounting Dead Center in Spindle

1. DISCONNECT LATHE FROM POWER!

2. Thoroughly clean and dry the tapered mating surfaces of the spindle bore, tapered sleeve, and the center, making sure that no lint or oil remains on the tapers.

3. Insert the center into the sleeve, then insert the sleeve into the spindle bore through the chuck or faceplate.

   Figure 66 shows an example of the dead center installed in the spindle, using a lathe dog and faceplate for turning between centers.

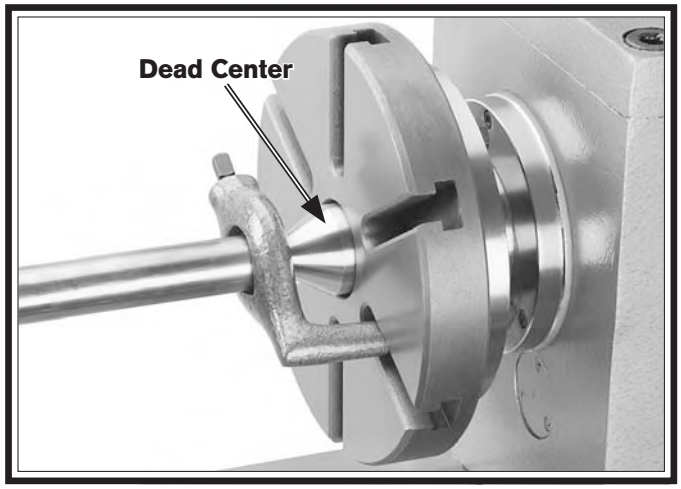

Figure 66. Example of using a dead center with a faceplate and lathe dog.

NOTICE

To avoid premature wear of the dead center or damage to the workpiece, use low spindle speeds and keep the tip of the dead center mounted in the tailstock well lubricated.

Removing Center from Spindle

To remove the sleeve and center from the spindle, insert a piece of round bar stock or similar tool through the outboard end (on the left side of the headstock), then tap the sleeve loose.

Note: Hold onto the sleeve and center as you tap them loose to avoid dropping them and damaging the tip of the center or the bedways.

Mounting Center in Tailstock

Either a dead center or live center can be mounted in the tailstock. Mounting instructions are the same for both. **Figure 67** shows an example of a dead center mounted in a tailstock.

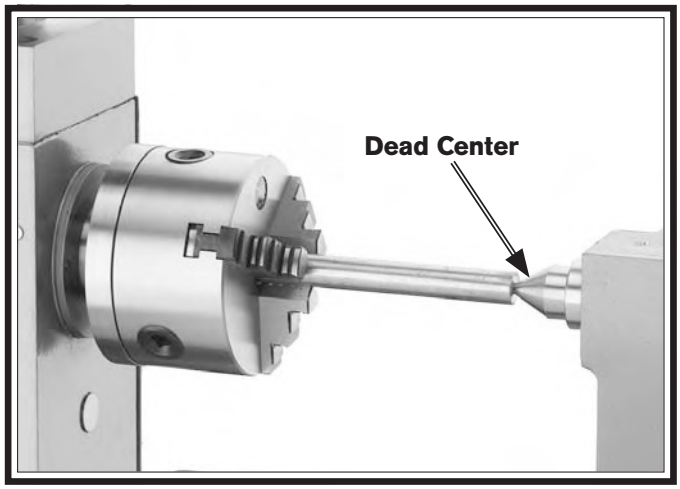

Figure 67. Example of using a dead center installed in the tailstock.

To mount a center in the tailstock:

1. DISCONNECT LATHE FROM POWER!
2. Thoroughly clean and dry the tapered mating surfaces of the tailstock quill bore and the carbide-tipped dead center, making sure that no lint or oil remains on the tapers.
3. Use the tailstock quill handwheel to feed the quill out from the casting about 1". (Do not feed the quill out of the casting more than 2" or stability and accuracy will be reduced.)
4. Insert the center into the tailstock quill.
5. Seat the center firmly into the quill during workpiece installation by rotating the quill handwheel clockwise to apply pressure, with the center engaged in the center hole in the workpiece.

Note: Only apply enough pressure with the tailstock quill to securely mount the workpiece between centers. Avoid over-tightening the center against the workpiece, or it may become difficult to remove later, and it will result in excessive friction and heat, which may damage the workpiece and the center.

Removing Center from Tailstock

To remove the center from the quill, hold onto it with a rag in one hand, then rotate the tailstock handwheel counterclockwise to draw the quill back into the casting until the center releases.

Steady Rest

The steady rest supports long shafts and can be mounted anywhere along the length of the bed.

To install and use the steady rest:

1. DISCONNECT LATHE FROM POWER!

2. Thoroughly clean the machined base of the steady rest, then place it on the lathe bedways so the triangular notch fits over the bedway prism.

3. Position the steady rest where required to properly support the workpiece, then tighten the hex nut shown in **Figure 68** to secure it in place.

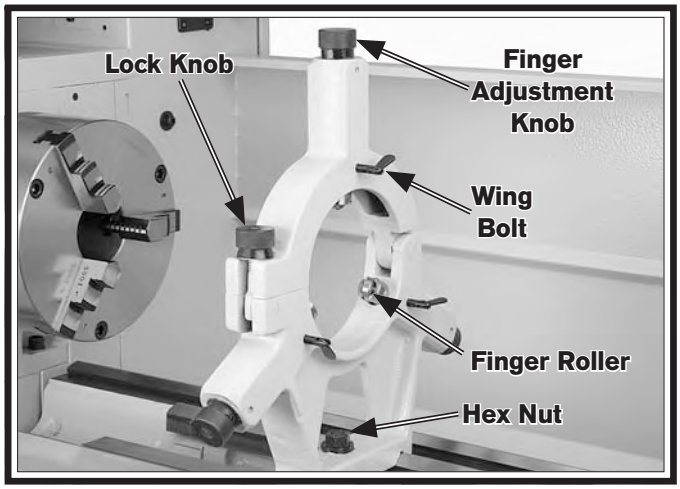

Figure 68. Steady rest components.

4. Loosen the lock knob and open the steady rest so the workpiece can rest on the bottom two finger rollers, as shown in **Figure 69**.

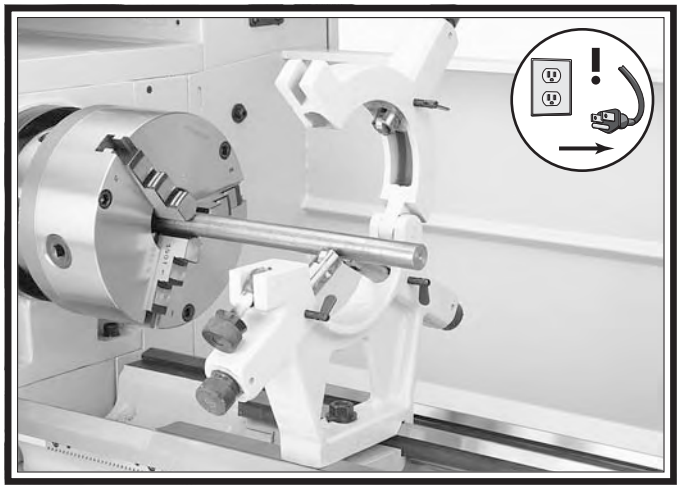

Figure 69. Workpiece mounted in the steady rest.

5. Close the steady rest so that the workpiece is inside the finger rollers, then tighten the lock knob.

6. Loosen the three wing bolts so the finger roller positions can be adjusted.

7. Use the finger adjustment knobs to just touch the finger rollers against the workpiece without causing workpiece deflection.

8. Tighten the three wing bolts.

Note: The finger rollers should properly support the workpiece but allow it to freely rotate.

Follow Rest

The follow rest mounts to the saddle with two cap screws (**Figure 70**). It is used on long, slender parts to prevent workpiece flexing from the pressure of the cutting tool during operation. Adjust the sliding finger rollers on the follow rest in the same manner as those on the steady rest.

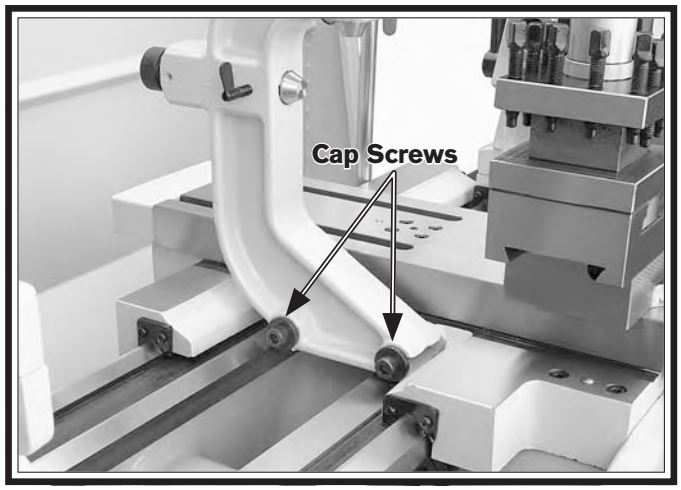

Figure 70. Follow rest attachment.

Compound Slide

The compound slide handwheel has an indirect-read graduated scale. This means that the distance shown on the scale represents the actual distance the tool moves, which will remove twice as much material from the diameter of the workpiece. The base of the compound slide has another graduated scale used for setting the tool to a specific angle.

To set the compound slide at a certain angle:

1. Loosen the two hex nuts at the base of the compound slide (1 of 2 shown in **Figure 71**).

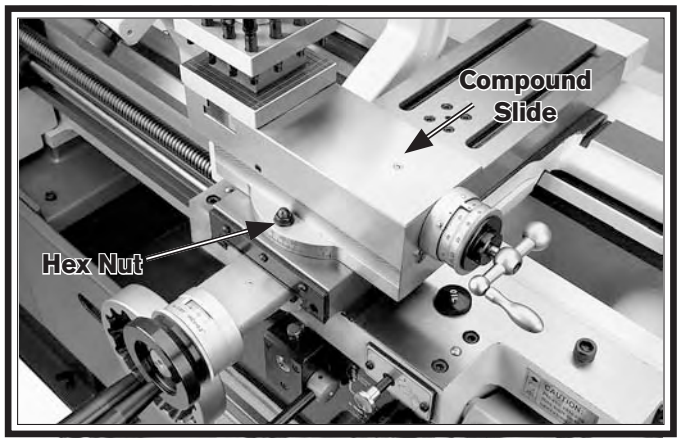

Figure 71. Compound slide set at an angle.

2. Rotate the compound to the desired angle, as indicated by the scale at the base, then retighten the two hex nuts.

Tip: The first time you set the angle of the compound rest for cutting threads, mark the location on the cross slide as a quick reference point. This will allow you to quickly return the compound rest to that exact angle the next time you need to cut threads.

Four-Way Tool Post

The four-way tool post is mounted on top of the compound slide and allows a maximum of four tools to be loaded simultaneously.

The four-way tool post allows for quick indexing to different tools, which is accomplished by loosening the top handle, rotating the tool post to the desired position, then re-tightening the handle to lock the tool into position.

Tool Needed	Qty
Tool Post T-Wrench	1

To load the tool post:

1. Choose the desired cutting tool.

2. Loosen the tool post bolts so that the cutting tool can fit underneath them.

Note: If necessary, place one steel shim underneath the cutting tool so the cutting tip is properly aligned with the workpiece. The shim should be as long and as wide as the cutting tool to properly support it.

⚠WARNING

Over-extending a cutting tool from the tool post will increase the risk of it breaking during operation, which may cause metal pieces to be thrown at the operator or bystanders with great force. Only extend a cutting tool 2.5 times the width of its cross-section or less (i.e., 2.5 x 0.5" = 1.25").

3. Firmly secure the cutting tool with at least two tool post bolts (**Figure 72**).

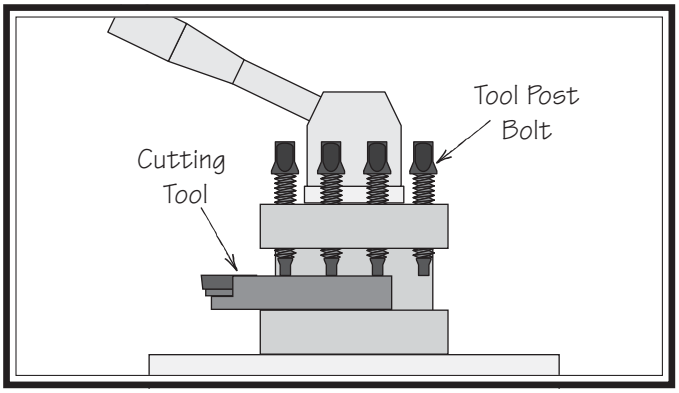

Figure 72. Tool mounted in 4-way tool post.

Aligning Cutting Tool with Tailstock Center

For most operations, the cutting tool tip should be aligned with the spindle center line, as illustrated in **Figure 73**.

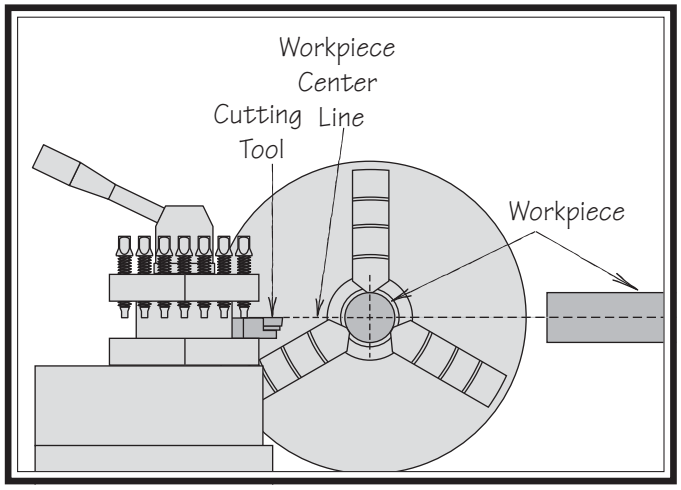

Figure 73. Cutting tool aligned with workpiece center (view from tailstock).

There are a number of ways to check and align the cutting tool to the spindle center line. Below are two common methods:

- Align the tip of the cutting tool with a center installed in the tailstock (refer to the instructions that follow). For this to work, the tailstock must be aligned to the spindle center line (refer to **Aligning Tailstock** on **Page 34**).

- Make a facing cut on a piece of round bar stock. If the tool is above/below the spindle center line, a nub will be left in the center of the workpiece. Adjust the height of the workpiece, then repeat the facing cut to check the adjustment. Repeat as necessary until the center of the workpiece is smoothly faced.

Tools Needed	Qty
Tool Post T-Wrench	1
Steel Shim	As Needed
Cutting Tool	1
Fine Ruler	1
Tailstock Center	1

To align the cutting tool with the tailstock center:

1. Mount the cutting tool in the tool post, then turn the tool post so the tooling faces the tailstock.

2. Install a center in the tailstock, and position the center tip near the tip of the cutting tool.

3. Lock the tailstock and quill in place.

4. Adjust the height of the cutting tool with a steel shim, so the tip just touches the end of the tailstock center, as shown in **Figure 74**.

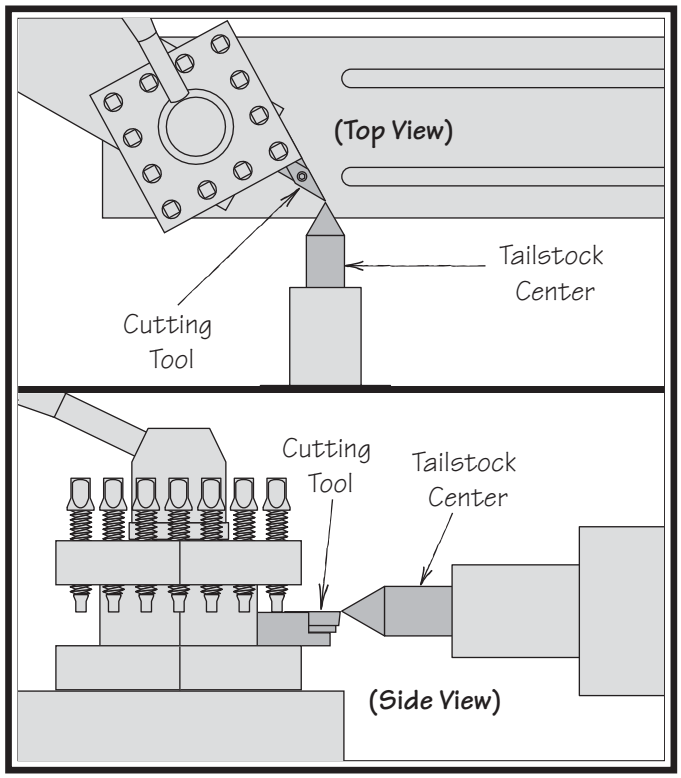

Figure 74. Cutting tool tip aligned with tailstock center.

Adjustable Apron Stop System

Use the adjustable apron stop collar (shown in **Figure 75**) to set the location where the carriage will be disengaged by the feedrod friction clutch. When the adjustable apron stop contacts the stop collar during a carriage feeding operation, the clutch disengages the feedrod from the apron and the carriage movement stops.

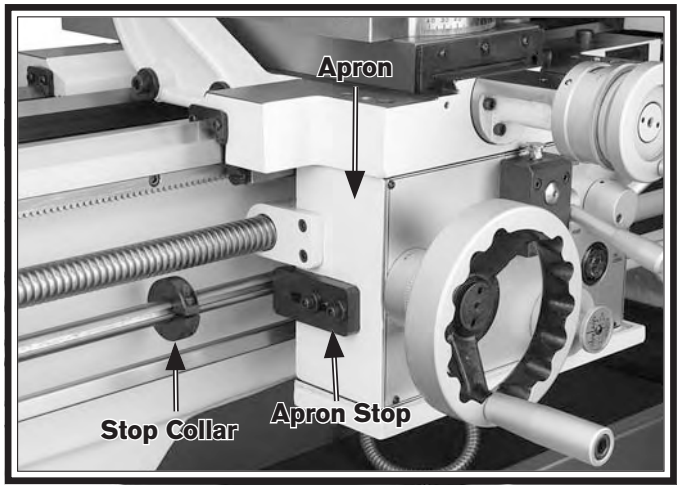

Figure 75. Adjustable apron stop and collar.

NOTICE

The adjustable apron stop system is designed to stop the longitudinal carriage movement at optional locations when the feedrod is engaged.

When the leadscrew is engaged for threading operations, the adjustable apron stop system will not disengage the leadscrew—you must move the half nut lever instead. Otherwise, the carriage can crash into the chuck, or if it contacts the stop, the leadscrew shear pin will break.

Before doing any threading operations, make sure to loosen the stop collar so it slides freely on the feedrod.

Carriage Stop

NOTICE

The carriage stop on this lathe will NOT automatically stop the carriage or disengage the power feed! Failure to heed this notice could result in the carriage crashing and causing severe machine or property damage.

Use the carriage stop as a guide to help judge when to stop the carriage movement.

Tools Needed	Qty
Hex Wrench 8mm	1

To adjust the carriage stop:

1. DISCONNECT LATHE FROM POWER!

2. Loosen the cap screws shown in **Figure 76**.

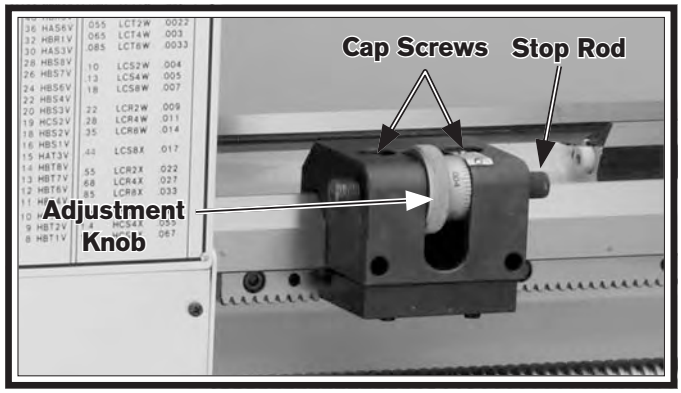

Figure 76. Carriage stop.

3. Use the carriage handwheel to position the carriage/cutting tool at the stop point you want to set (typically the maximum distance the carriage can travel before there is a crash).

4. Position the carriage stop so the rod is firmly against the carriage, retighten the cap screws loosened in **Step 2**, and use the adjustment knob to fine tune the position of the stop rod.

5. Move the carriage away from the stop rod, then move it back against the stop rod and verify that tooling will not make contact with chuck, jaws, or other components (rotate the chuck by hand to verify rotational clearance).

Manual Feed

You can manually move the cutting tool around the lathe for facing or turning operations using the handwheels shown in **Figure 77** and described below.

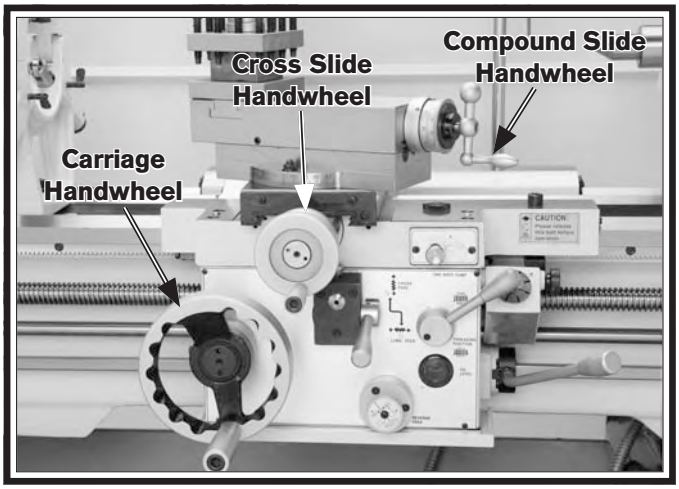

Figure 77. Carriage Controls.

Carriage Handwheel

The carriage handwheel moves the carriage left or right along the bed. Use this control when setting up the machine for facing or turning.

Cross Slide Handwheel

The cross slide handwheel moves the tool toward and away from the work. Turning the dial clockwise moves the slide toward the workpiece. Adjust the graduated scale by holding the handwheel with one hand and turning the dial with the other. The graduated scale reads in 0.001" increments and is a "direct-read" which means that the distace on the collar reflects the amount removed from the diamter of the workpiece.

Compound Slide Handwheel

The compound slide handwheel controls the position of the cutting tool relative to the workpiece. The compound is adjustable for any angle within its range. Angle adjustment is secured by two nuts on the base of the compound. The graduated scale reads in 0.001" increments and is a "indirect-read" which means that the distace on the collar reflects the distance that the tool moves.

Spindle Speed

Using the correct spindle speed is important for safe and satisfactory results, as well as maximizing tool life.

To set the spindle speed for your operation, you will need to: (1) Determine the best spindle speed for the cutting task, and (2) configure the lathe controls to produce the required spindle speed.

Determining Spindle Speed

Many variables affect the optimum spindle speed to use for any given operations, but the two most important are the recommended cutting speed for the workpiece material and the diameter of the workpiece, as noted in the formula shown in **Figure 78**:

$$\frac{*\text{Recommended Cutting Speed (FPM)} \times 12}{\text{Dia. of Cut (in inches)} \times 3.14} = \text{SpindleSpeed (RPM)}$$

*Double if using carbide cutting tool

Figure 78. Spindle speed formula for lathes.

Cutting speed, typically defined in feet per minute (FPM), is the speed at which the edge of a tool moves across the material surface.

A recommended cutting speed is an ideal speed for cutting a type of material in order to produce the desired finish and optimize tool life.

The books **Machinery's Handbook** or **Machine Shop Practice**, and some internet sites, provide excellent recommendations for which cutting speeds to use when calculating the spindle speed. These sources also provide a wealth of additional information about the variables that affect cutting speed and they are a good educational resource.

Also, there are a large number of easy-to-use spindle speed calculators that can be found on the internet. All of these sources will help you take into account all the applicable variables in order to determine the best spindle speed for the operation.

Setting Spindle Speed

1. Make sure the spindle is turned ***OFF*** and it has come to a complete stop.

2. Use the chart in **Figure 79** to determine the available spindle speed range closest to your calculated spindle speed.

SPEEDS	
LEVER	**RPM**
Low	**20-400**
High	**400-2500**

Figure 79. Spindle speed range chart.

NOTICE

If the headstock is in high range (400-2500 RPM), and if the spindle speed dial is turned completely to the left, the tachometer may show a speed lower than the 400 RPM listed on the headstock label. This headstock label indicates the allowable spindle speed for cutting operations within that range. If the lever is in high range, do not attempt cutting operations below 400 RPM.

3. Adjust the spindle speed range lever to the range that covers your calculated spindle speed.

Note: To shift the spindle speed range lever, you may need to apply pressure to the lever and slightly rotate the spindle by hand.

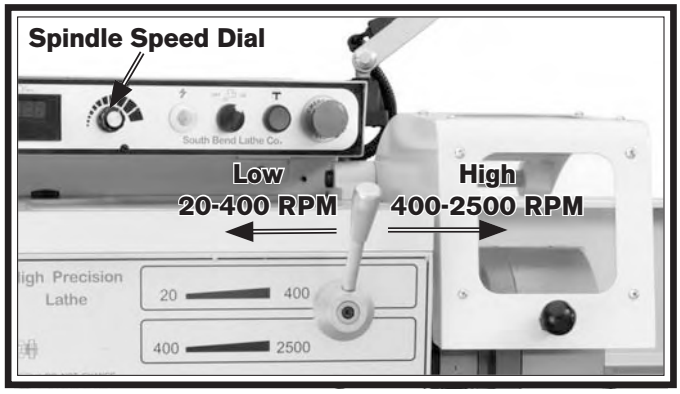

Figure 80. Controls used to adjust spindle speed.

WARNING

Make sure the variable speed dial is turned all the way to the left (counterclockwise) before turning the lathe ON, or it may start up at a dangerously high rate of speed.

4. Turn the spindle ***ON*** and slowly turn the variable speed dial to carefully adjust the spindle speed (shown on the digital display) to your calculated spindle speed.

Power Feed

On this machine, both the carriage and cross slide have power feed capability. The rate that these components move (feed rate) is controlled by how the levers are configured on the gearbox.

Feed rate and spindle speed must be considered together. The sources you use to determine the optimum spindle speed for an operation will also provide the optimal feed rate to use with that spindle speed.

Often, the experienced machinist will use the feeds and speeds given in their reference charts or web calculators as a starting point, then make minor adjustments to the feed rate (and sometimes spindle speed) to achieve the best results.

The carriage can alternately be driven by the leadscrew for threading operations. However, this section covers using the power feed option for the carriage and cross slide components for non-threading operations. To learn how to power the carriage for threading operations, refer to the **Threading Controls** section **Page 48**.

Power Feed Controls

The feed direction lever (**Figure 81**) controls direction of the carriage. The quick change feed direction knob (**Figure 82**) reverses the feed direction of the carriage while the lathe is running.

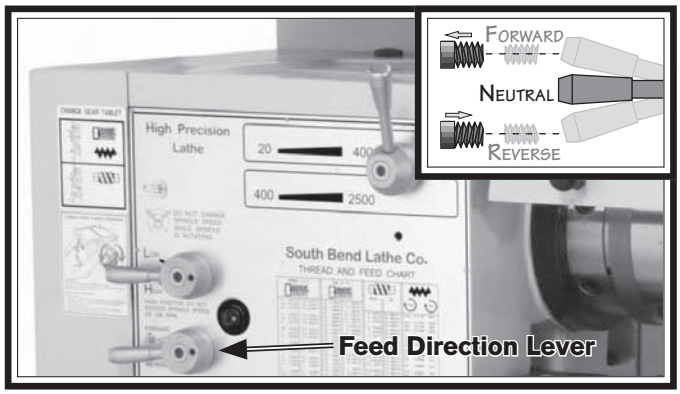

Figure 81. Feed direction lever.

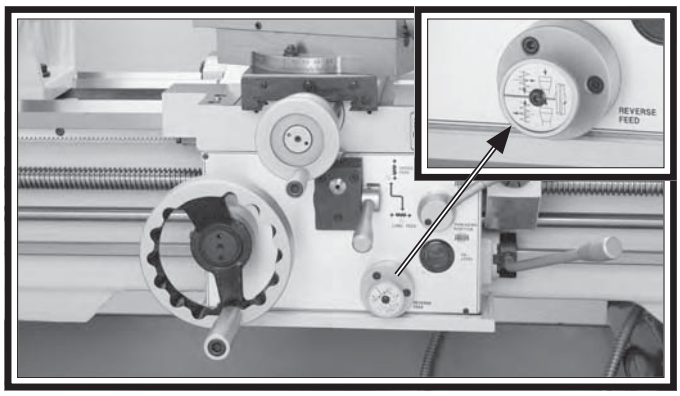

Figure 82. Quick change feed direction knob.

To engage the power feed:

1. Make sure the spindle is ***OFF*** and has come to a complete stop.

2. Use the feed direction lever to select the direction that the feed rod will rotate.

Note: The feed rod rotation will be the reverse of what is shown on the control panel diagram if the quick change feed direction knob is engaged.

NOTICE

DO NOT move the feed direction lever on the headstock while the spindle is turning, or damage will occur to the headstock gearing.

3. Use the feed control lever on the front of the apron to engage power feed for either the carriage or the cross slide (see **Figure 83**). To engage the carriage, push the lever to the left and down. To engage the cross slide, push the lever to the right and up.

Note: Sometimes you need to slightly rotate the handwheel of the component you are trying to engage, so that the gears can mesh.

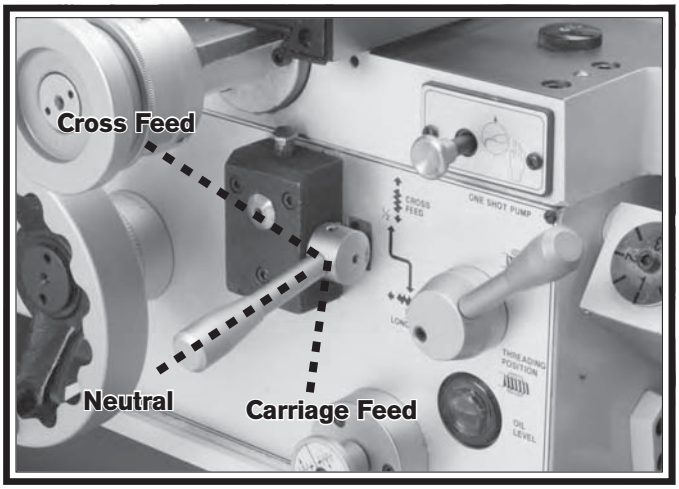

Figure 83. Feed control lever positions.

To use the quick change feed direction knob:

1. While the lathe is running, place the feed control lever in neutral.

2. Push or pull the quick change feed direction knob to change the direction of the feed rod.

3. Re-engage the feed direction lever. The feed rod rotation will now be reversed, causing the engaged carriage or cross slide to move in the opposite direction.

Understanding Thread & Feed Rate Chart

Figure 84 shows the configurations of gearbox levers that are required to set the available feed rates. This same chart can also be found on the machine.

METRIC THREADING

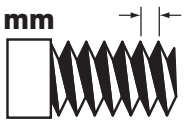

.2	LCT1Z	2.0	LCR1Y
.225	LCT2Z	2.5	LCR3Y
.25	LCT3Z	3.0	LCR6Y
.3	LCT6Z	3.5	LCR8Y
.35	LCT8Z	4.0	HCR3Z
.4	LCS1Z	4.5	HCS2Y
.45	LCS2Z	5.0	HCS3Y
.5	LCS3Z	5.5	HCS4Y
.6	LCS6Z	6.0	HCS6Y
.7	LCS8Z	6.5	HCS7Y
.75	LCT6Y	7	HCS8Y
.8	LCR1Z	8	HCR1Y
.9	LCR2Z	9	HCR2Y
1.0	LCR3Z	10	HCR3Y
1.1	LCR4Z	11	HCR4Y
1.2	LCR6Z	12	HCR6Y
1.25	LCS3Y	13	HCR7Y
1.3	LCR7Z	14	HCR8Y
1.4	LCR8Z		
1.5	LCS6Y		
1.75	LCS8Y		

INCH THREADING

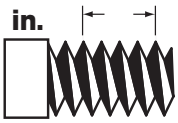

72	LAR6V	12	LBT6V
60	LAR3V	11½	LBT5V
56	LBR8V	11	LBT4V
54	LAR2V	10	LBT3V
48	LBR6V	9	LBT2V
44	LBR4V	8	LBT1V
40	LBR3V	7½	HAS3V
36	LAS6V	7	HBS8V
32	LBR1V	6	HBS6V
30	LAS3V		
28	LBS8V	5	HBS3V
27	LAS2V	4½	HBS2V
26	LBS7V	4	HBS1V
24	LBS6V		
23	LBS5V	3¾	HAT3V
22	LBS4V	3½	HBT8V
20	LBS4V	3¼	HBT7V
19	LCS2V		
18	LBS2V	3	HBT6V
16	LBS1V	2 7/8	HBT5V
15	LAT3V	2¾	HBT4V
14	LBT8V		
13½	LAT2V	2½	HBT3V
13	LBT7V	2¼	HBT2V
		2	HBT1V

MODULAR OR DIAMETRAL

Mod.	D.P.		
.3	HCT6Z	44	HBR4V
.4	HCS1Z	40	HBR3V
.5	HCS3Z	36	HAS6V
		32	HBR1V
.6	HCS6Z	30	HAS3V
.7	HCS8Z	28	HBS8V
.8	HCR1Z	26	HBS7V
.9	HCR2Z	24	HBS6V
1.0	HCR3Z	22	HBS4V
1.25	HCS3Y	20	HBS3V
		19	HCS2V
1.5	HCS6Y	18	HBS2V
1.75	HCS8Y	16	HBS1V
2.0	HCR1Y	15	HAT3V
		14	HBT8V
2.25	HCR2Y	13	HBT7V
2.5	HCR3Y	12	HBT6V
2.75	HCR4Y	11	HBT4V
3.0	HCR6Y	10	HBT3B
3.25	HCR7Y	9	HBT2V
3.5	HCR8Y	8	HBT1V

TURNING FEED RATE (DIST./REVOLUTION)

.050	LCT1W	.002
.055	LCT2W	.0022
.065	LCT4W	.003
.085	LCT8W	.0033
.10	LCS2W	.004
.13	LCS4W	.005
.18	LCS8W	.007
.22	LCR3W	.009
.28	LCR4W	.011
.35	LCR8W	.014
.44	LCS3X	.017
.55	LCT2X	.022
.68	LCR3X	.027
.85	LCR8X	.033
1.2	HCS2X	.047
1.4	HCS4X	.055
1.7	HCS8X	.067

Figure 84. Thread and feed rate chart.

Positioning Gearbox Levers

To cut a particular thread or establish a particular feed rate, you may need to first swap the gearbox drive gear, depending on where it is currently set (refer to **End Gear Setup** on **Page 47**).

Once you have confirmed that the end gear is set up properly, you can then move the gearbox levers to the required positions. The arrows going from **Figure 84** to **Figure 85** show which gearbox levers must be moved to achieve an example feed rate.

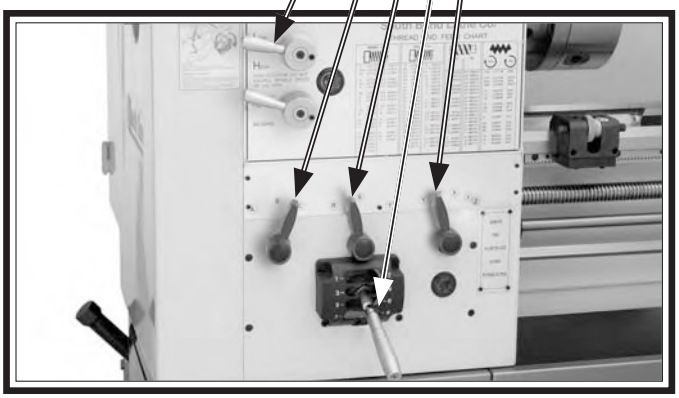

Figure 85. Gearbox levers set for a feed rate of 0.014" (0.35mm).

End Gear Setup

The gearbox drive gear on this lathe can be configured for the "normal position" or the "alternate position" (both described in following paragraphs), depending upon the type of operation to be performed. The lathe is shipped with the end gears in the normal position. Gears must be thoroughly cleaned and re-coated in grease before installing (refer to **Page 61**), and the backlash must be maintained at 0.005" for correct meshing.

Normal Position

The 24T end gear is installed in the top position, the 44T/56T end gears in the middle position, and the 57T end gear in the bottom position, as shown in **Figure 86**. In the normal position, the 56T and 57T gears are meshed, which allows for inch and metric threading and all general feed operations.

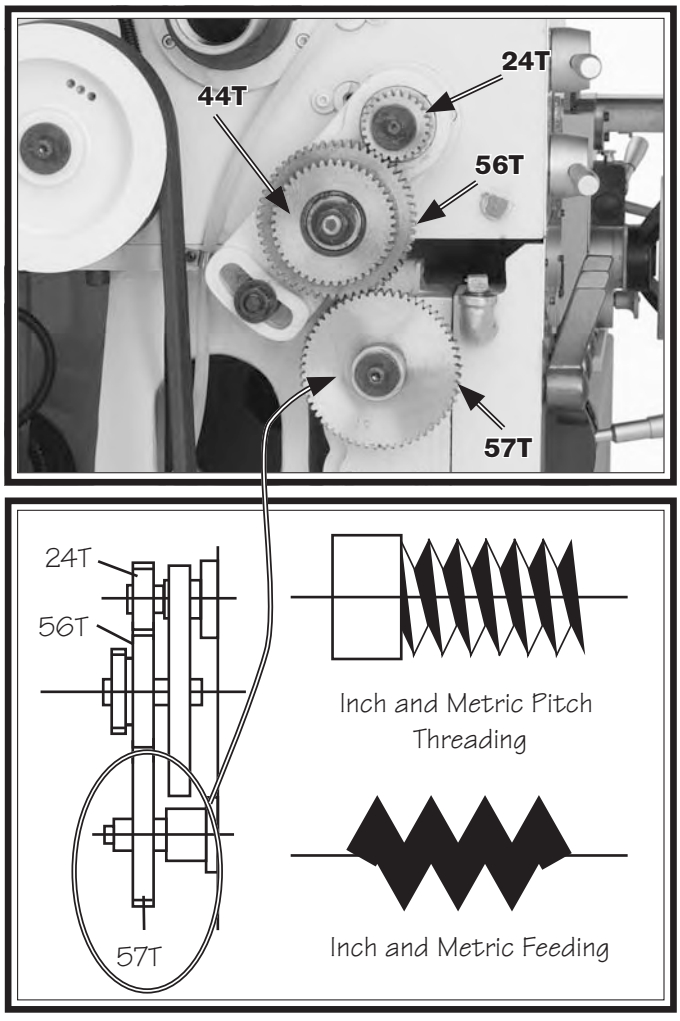

Figure 86. Normal end gear position.

Alternate Position

When the 44- and 57-tooth end gears are meshed (see **Figure 87**), you can perform modular and diametral pitch turning.

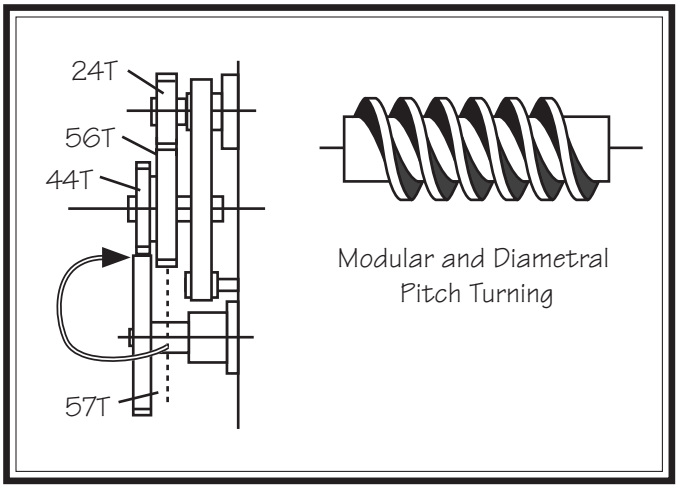

Figure 87. Alternate end gear position.

Configuring End Gears

1. DISCONNECT LATHE FROM POWER!

2. Move the gearbox range lever to "Low" so that the gears will not rotate in the following steps, then open the lathe headstock side cover.

3. To change the position of the 57T gear:

   a. Remove the cap screw and flat washer that secures the gear, then remove the gear (see **Figure 88**).

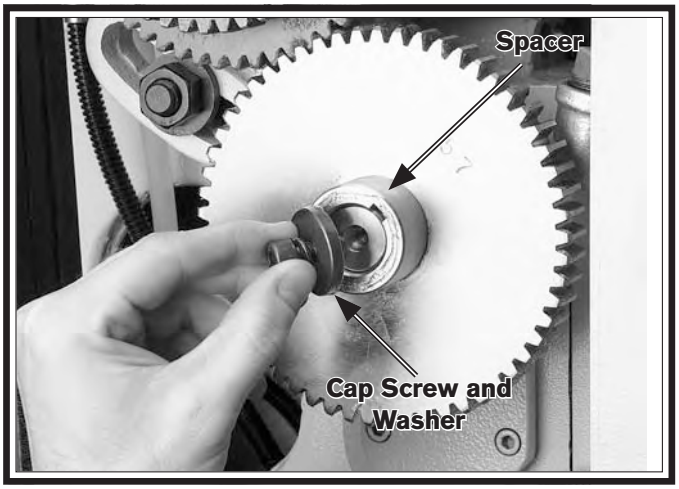

Figure 88. Removing the end gear.

Note: Take care not to misplace the key from the gear shaft.

b. Clean away debris and grime from the gear and apply a light coat of machine oil.

c. Swap the position of the gear, as shown in **Figure 87**, then align it with the key and insert it on the gear shaft.

d. Re-install the flat washer and cap screw.

Note: DO NOT overtighten the cap screw. The cap screw merely holds the gear in place and overtightening it will make it harder to remove later and may restrict its rotation.

4. Close and secure the headstock side cover.

Threading Controls

If you are unfamiliar with how to cut threads on a lathe, we strongly recommend that you read books, review industry trade magazines, or get formal training before beginning any attempting any threading projects.

Power Feed Lever

The feed control lever must be in the neutral (horizontal) position for threading operations or the half nut will not engage with the leadscrew (see **Figures 89–90**).

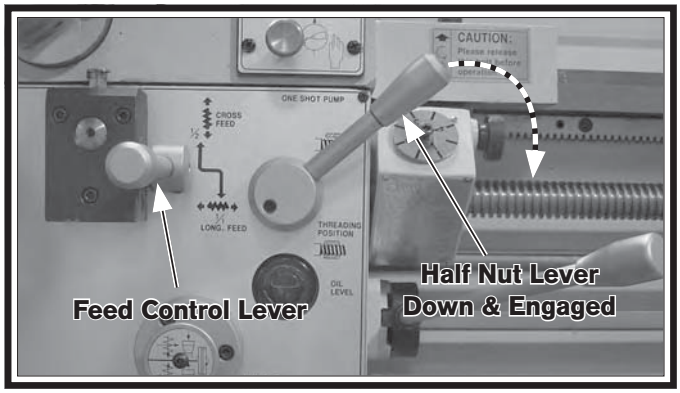

Figure 89. Carriage controls set up for threading.

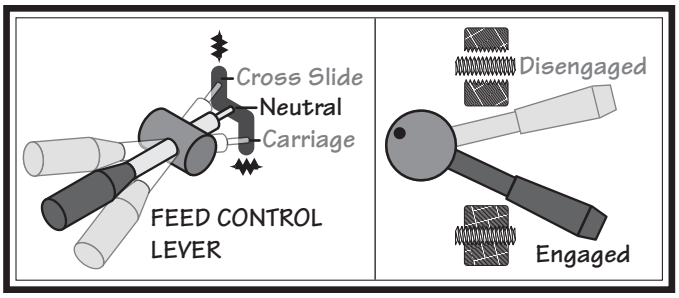

Figure 90. Feed control lever and half nut positions for threading.

Half Nut Lever

The half nut lever engages the carriage with the leadscrew which moves the cutting tool along the length of the workpiece (see **Figure 89**).

NOTICE

When threading, we recommend using the slowest speed possible and avoiding deep cuts, so you are able to disengage the half nut and prevent an apron crash!

Thread Dial & Chart Overview

The numbers on the thread dial are used with the thread dial chart to show when to engage the half nut during inch threading. The thread dial gear must be engaged with the leadscrew for this to work. Loosen the knurled hand knob on the thread dial, pivot the dial gear into mesh with the leadscrew, then tighten the hand knob (see **Figure 91**).

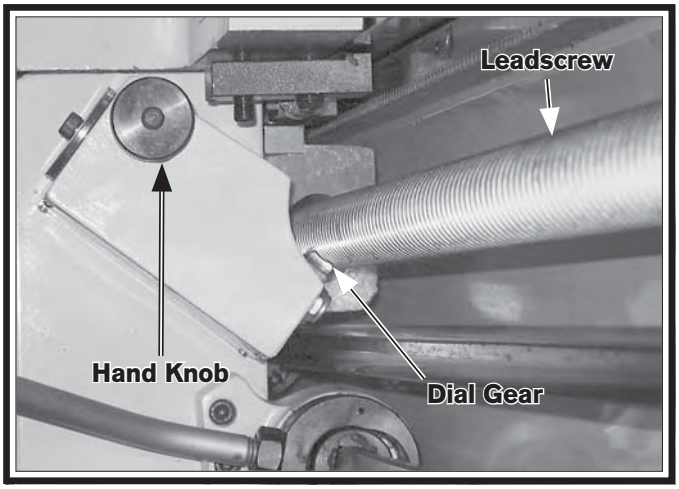

Figure 91. Thread dial engaged with the leadscrew.

Using Thread Dial and Chart

Find the TPI (threads per inch) that you want to cut in the left column (see **Figure 92**), then reference the dial number to the right of it. The dial numbers indicate when to engage the half nut for a specific thread pitch. The thread dial chart can also be found on the front of the thread dial housing.

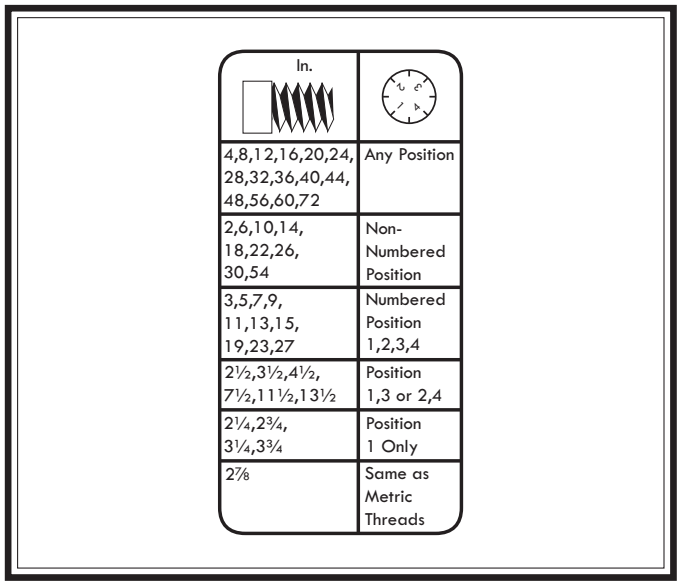

In.	
4,8,12,16,20,24, 28,32,36,40,44, 48,56,60,72	Any Position
2,6,10,14, 18,22,26, 30,54	Non-Numbered Position
3,5,7,9, 11,13,15, 19,23,27	Numbered Position 1,2,3,4
2½,3½,4½, 7½,11½,13½	Position 1,3 or 2,4
2¼,2¾, 3¼,3¾	Position 1 Only
2⅞	Same as Metric Threads

Figure 92. Thread dial chart.

The thread dial is not used for metric threading or for diametral or modular gear turning. You must leave the half nut lever engaged from the beginning until the threads are complete for these types of operations.

The following examples explain how to use the thread dial chart.

TPI 4-72 Divisible By 4

Use any line (position) on the thread dial, shown in **Figure 93**, for threading TPI divisible by four.

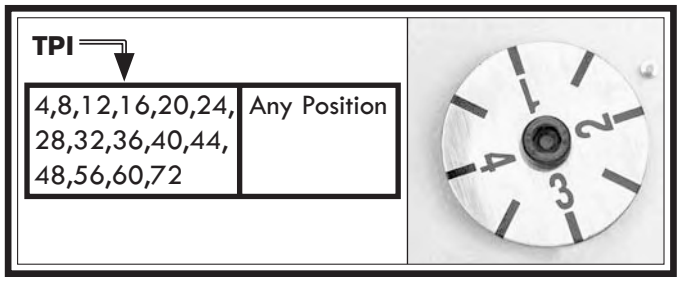

Figure 93. Any position on the dial for threading 4-72 TPI.

TPI 2-54 Not Divisible By 4

Use any of the non-numbered lines on the thread dial for threading the TPI shown in **Figure 94**.

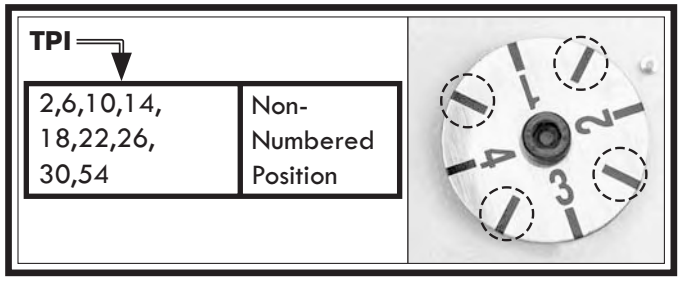

Figure 94. Marks are selected on the dial for threading 2-54 TPI.

Odd Numbered TPI

Use any of the numbered lines on the thread dial for threading the TPI shown in **Figure 95**.

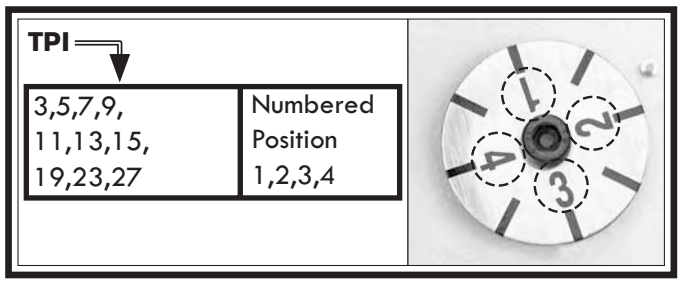

Figure 95. Numbers are selected on the dial for threading odd numbered TPI.

½ Fractional TPI

Use any opposing number pairs—2/4 or 1/3 on the thread dial for ½ fractional TPI (**Figure 96**). For example, to cut a 3½ thread, select 1 on the dial, then start threading, using 1 or 3 as your reference points.

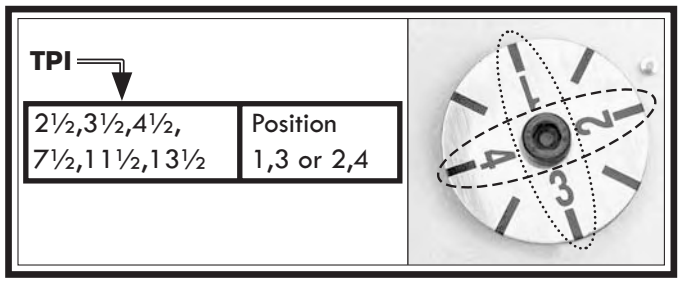

Figure 96. Opposing number group are selected on dial for cutting ½ thread TPI.

Other Fractional TPI

Use position 1 on the thread dial for cutting the TPI shown in **Figure 97**.

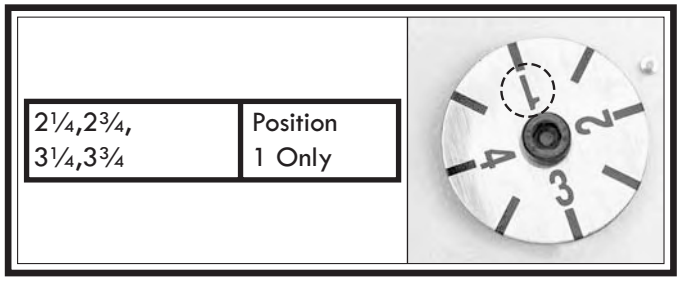

Figure 97. Any number on dial is selected for other fractional TPI.

2⅞ TPI

Use any numbered or non-numbered line on the thread dial to cut the TPI shown in **Figure 98**.

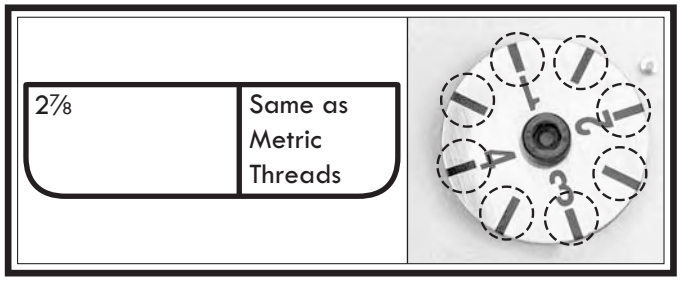

Figure 98. Any number on the dial can be selected for 2⅞ TPI.

Chip Drawer

The chip drawer shown in **Figure 99** catches swarf and metal chips during the machining process. It easily slides open to provide access to swarf during cleanup.

Also, the chip drawer contains a screen that allows runoff cutting fluid to drain back into the cutting fluid tank.

Figure 99. Chip drawer.

⚠CAUTION

If pulled out quickly and more than half of the way, the drawer could fall out and hit your feet, causing serious injury. Therefore, open the drawer slowly and avoid opening it more than half of the way.

Cutting Fluid System

The cutting fluid system delivers cutting fluid through a positionable nozzle and is turned ON/OFF by the control panel cutting fluid pump switch and the valve lever near the base of the nozzle hose (see **Figure 100**).

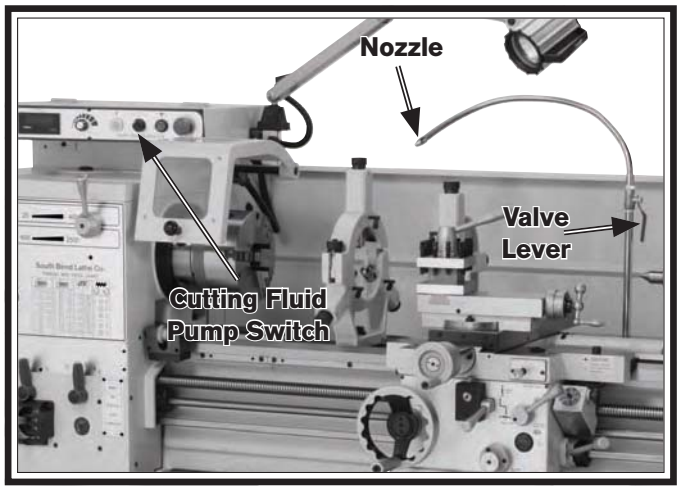

Figure 100. Coolant system controls and components.

Always use high quality cutting fluid in your coolant system and follow the manufacturer's instructions for diluting. The quick reference table shown in **Figure 101** can help you select the appropriate cutting fluid.

Refer to **Cutting Fluid System** on **Page 62** for detailed instructions on how to add or change cutting fluid. Check the cutting fluid regularly and promptly change it when it becomes overly dirty or rancid, or as recommended by fluid manufacturer.

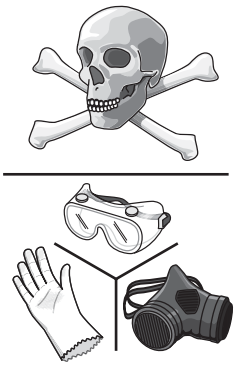

⚠WARNING

BIOLOGICAL & POISON HAZARD!

Use the correct personal protection equipment when handling cutting fluid. Follow federal, state, and fluid manufacturer requirements for proper disposal.

NOTICE

Running the pump without adequate fluid in the tank may permanently damage it. This is abuse and is not covered by the warranty.

To use the cutting fluid system on your lathe:

1. Make sure the tank is properly serviced and filled with cutting fluid, and that you wear the necessary personal protection equipment.
2. Position the cutting fluid nozzle for your operation.
3. Use the control panel cutting fluid pump switch to turn the coolant pump ***ON***.
4. Adjust the flow of cutting fluid by using the valve lever near the base of the nozzle hose.

Note: Promptly clean any splashed cutting fluid from the floor to avoid a slipping hazard.

Workpiece	Dry	Water Soluble Oil	Synthetic Coolants	Sulferized Oil	Mineral Oil
Aluminum		X	X		
Brass	X	X	X		
Bronze	X	X	X		X
Cast iron	X				
Low Carbon Steel		X	X		
Alloy Metals		X	X	X	X
Stainless Steel		X	X	X	X

General Note: Cutting fluids are used for heavy-duty lathe operations and production turning. Oil-water emulsions and synthetic cutting fluids are the most common for typical lathe operations. Sulferized oils often are used for threading. For small projects, spot lubrications can be done with an oil can or brush, or omitted completely.

Figure 101. Cutting fluid selection table.

Accessories

This section includes the most common accessories available for your lathe, which may be available through your local South Bend Lathe Co. dealer. If you do not have a dealer in your area, please call us at (360) 734-1540 or email us at **cs@southbendlathe.com**.

SB1268—Collet Attachment 5—C for SB1012, SB1013, SB1014, SB1015, SB1037 & SB1038 Lathes

SB1269—Taper Attachment for SB1012, SB1013, SB1014, SB1015, SB1037 & SB1038 Lathes

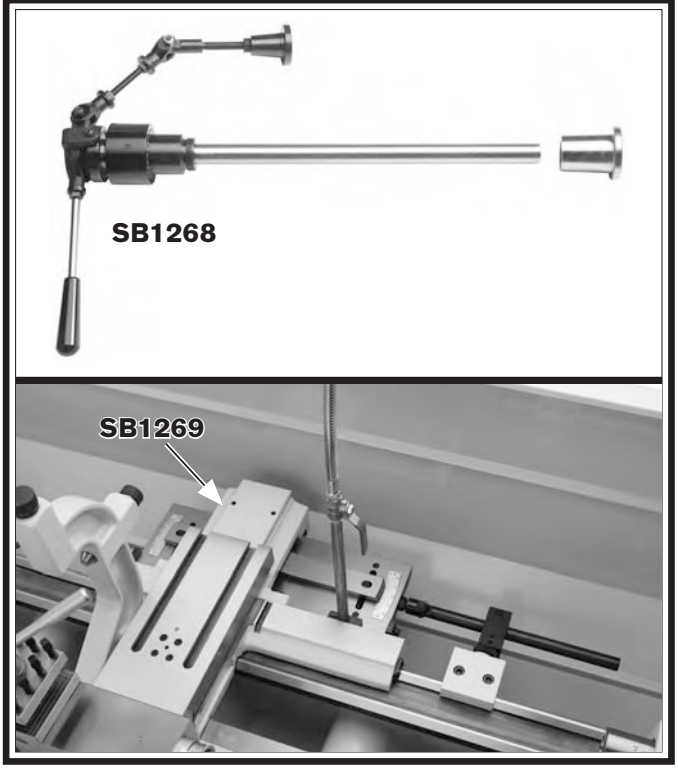

Figure 102. Collet and taper attachments accessories.

SB1266—8" Backplate D1-6 for SB1012 & SB1013 Lathes

SB1267— 10" Backplate D1-6 for SB1014, SB1015, SB1037 & SB1038 Lathes

SB1313—6" 4-Jaw Scroll Chuck Plain-Back w/2-Pc. Jaws 1.772" Bore

SB1313—6" Adjustable 4-Jaw Chuck All-Steel Body w/2-Pc. Jaws and 1.654" Bore

SB1239—MT#4 High Performance Live Center

South Bend® brand live centers are the best centers in the industry made with pride and uncompromising quality.

- Shafts are made of alloy steel and vacuum heat treated to HRC60 ± 1 for high rigidity and durability.
- Centers use a combination of roller bearings, thrust ball bearings and ball bearings.
- Applicable for CNC lathes and high speed turning.
- Waterproof design.
- 60° centers.

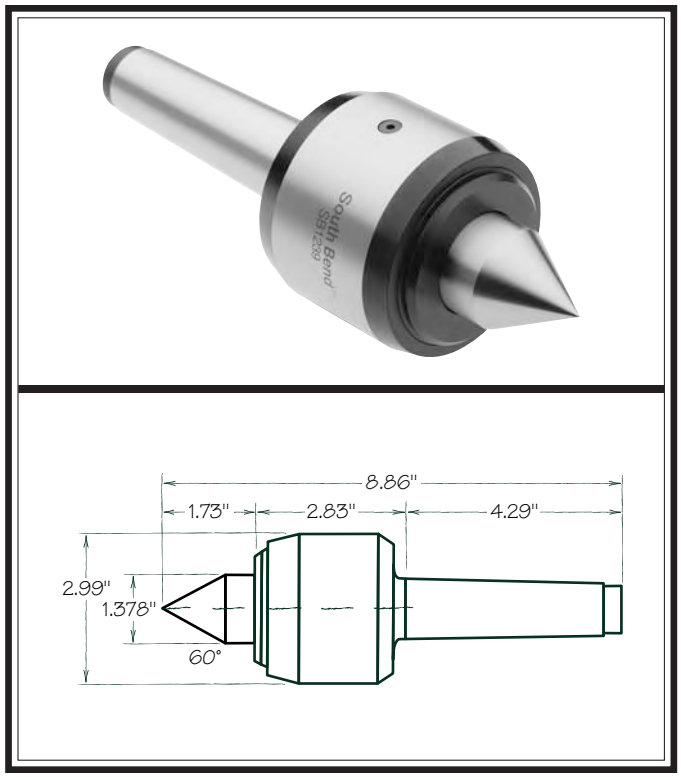

Figure 103. Model SB1239 High Performance Live Center.

High-Precision 3-Jaw Scroll Chucks

SB1307—6" 2-Pc. Plain-Back 1.772" Bore
SB1308—7" 2-Pc. Plain-Back 2.283" Bore
SB1309—8" 2-Pc. Plain-Back 2.283" Bore
SB1310—9" 2-Pc. Plain-Back 2.756" Bore
SB1311—10" 2-Pc. Plain-Back 3.504" Bore
SB1312—12" 2-Pc. Plain-Back 4.134" Bore

SB1247—MT4 Bull Nose Center

- Cr-Mo steel; hardened to HRC60 ± 1
- Taper roller & ball bearing construction
- Great for turning pipes

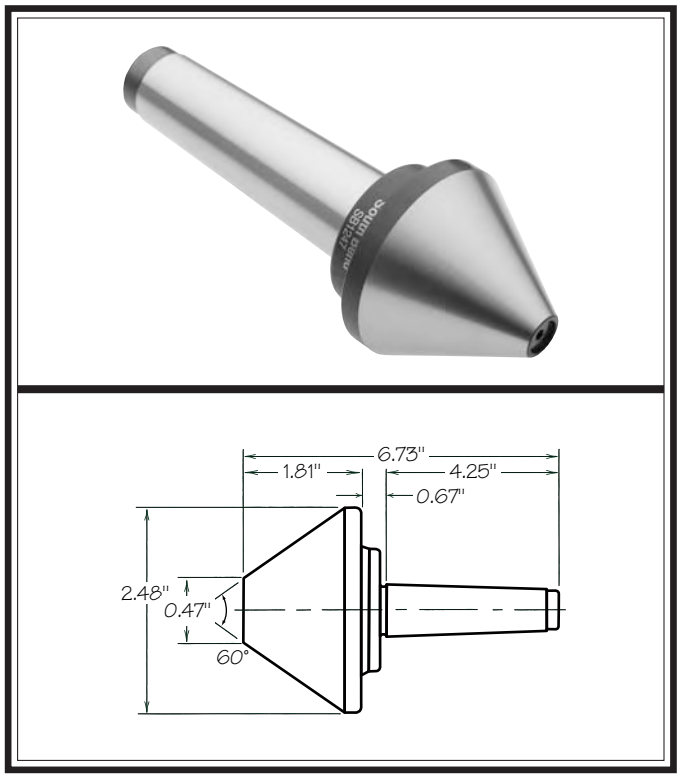

Figure 104. SB1247 MT4 Bull Nose Center.

SB1279—10 Pc. Precision 5—C Collet Set

Set of 10 collets sized from ⅛" - ¾". Same quality as the individual collets, only packaged in one convenient set.

Figure 105. Model SB1279 10 Pc. 5-C Collet Set.

SB1298—SBL Bench Lathe Shop Clock
SB1299—SBL Toolroom Lathe Shop Clock
SB1300—SBL Lathe with Man

These fine traditional shop clocks are constructed with a metal antique-finished frame. They are easy to read from a distance and measure 14" in diameter. Pictures just don't do them justice. They are very nice quality clocks and perfect for the South Bend Lathe aficionado.

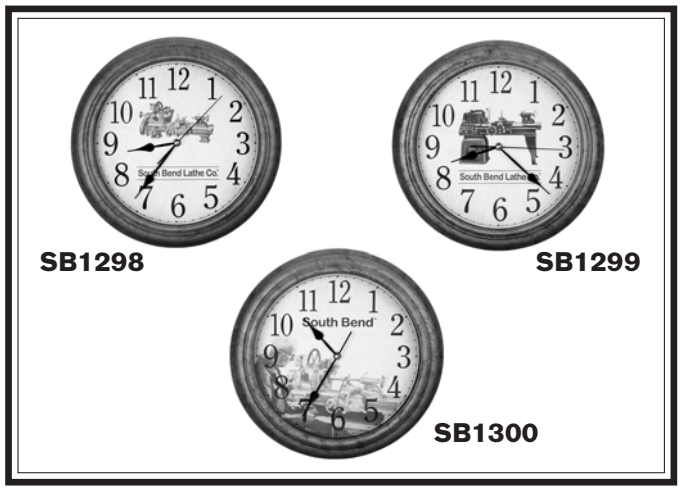

Figure 106. Antique-finished South Bend shop clocks.

SBL Gearhead T-Shirt
SBL One Good Turn T-Shirt

100% Cotton, preshrunk T-shirts, available in sizes S, M, L, XL, 2XL, 3XL.

Figure 107. Official South Bend Lathe T-Shirts.

Maintenance Schedule

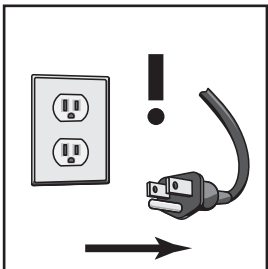

⚠WARNING

Always disconnect power to the machine before performing maintenance. Failure to do this may result in electrocution or accidental startup injury.

Each operator of this machine is responsible for ensuring proper care of the equipment. We strongly recommend all operators make a habit of following the daily maintenance procedures.

For optimum performance from this machine, this maintenance schedule must be strictly followed. Use the chart provided on **Page 55** to ensure this is done.

Ongoing

To maintain a low risk of injury and proper machine operation, if you ever observe any of the items below, shut down the machine immediately and fix the problem before continuing operations:

- Loose mounting bolts or fasteners.
- Worn, frayed, cracked, or damaged wires.
- Guards removed.
- Emergency stop button not working correctly or not requiring you to reset it before starting the machine again.
- A reduction in braking speed or efficiency.
- Headstock oil not flowing against sight glass.
- Cutting fluid not flowing out.
- Any other unsafe condition.

Daily, Before Operations

- Check/add gearbox oil (**Page 58**).
- Check/add apron oil (**Page 58**).
- Check cutting fluid level (**Page 62**).
- Lubricate the ways (**Page 59**).
- Put oil in the ball oilers (**Page 60**).
- Check/add leadscrew & feedrod bearing oil (**Page 59**).
- Clean/lubricate the leadscrew (**Page 59**).
- Turn spindle speed dial all the way down.
- Move the power feed lever on the apron to neutral (to prevent crashes upon startup).
- Ensure carriage lock bolt is loose.

Daily, During Operations

- Verify headstock oil flows when power is turned ***ON*** (**Page 56**).
- Verify electrical box cooling fan is operating.
- Verify headstock oil temperature is under 170° F.

Daily, After Operations

- Vacuum/clean all chips and swarf from bed, slides, and chip drawer.
- Wipe down all unpainted or machined surfaces with an oiled rag (**Page 59**).
- Depress emergency stop button and shut ***OFF*** the main power switch (to prevent accidental startup).

Monthly

- Drain and clean the cutting fluid tank, then add new cutting fluid.
- Remove electrical box air filter and clean with compressed air or a vacuum.

Annually (or Semi-Annually with Hard Use)

- Drain and clean the headstock oil reservoir, then add new oil.
- Change the apron oil.
- Change the gearbox oil.

Cleaning

Regular cleaning is one of the most important steps in taking care of this lathe. We recommend that each operator be responsible for cleaning the machine immediately after using it or at the end of the day. We also recommend that the cleaning routine be planned into the workflow schedule, so that adequate time is set aside to do the job right.

Typically, the easiest way to clean swarf from the bed ways and chip drawer is to use a wet/dry shop vacuum that is dedicated for this purpose only. The small chips leftover after vacuuming can be wiped up with a slightly oiled rag. Avoid using compressed air to blow off chips, as it may drive them deeper into moving surfaces and could cause sharp chips to fly into your face or hands.

All visible swarf should be removed from the lathe during cleaning.

South Bend Lathe Co.® Monthly Maintenance Chart for EVS Toolroom Series Lathes

Item \ Day	1	2	3	4	5	6	7	8	9	10	11	12	13	14	15	16	17	18	19	20	21	22	23	24	25	26	27	28	29	30	31
Lubrication																															
Ways																															
Ball Oilers																															
Leadscrew																															
Unpainted Surfaces																															
Inspection																															
Headstock Oil Level																															
Gearbox Oil Level																															
Apron Oil Level																															
Leadscrew Bearing Oil Level																															
Cutting Fluid Level																															
Cutting Fluid Condition		**See owner's manual for more information regarding cutting fluid condition, replacement, disposal, and safety.**																													

Use this chart to keep track of the maintenance performed on your South Bend Lathe. Cross out or initial the "Day" box for each item on the list. If the box is blacked out, maintenance is not required for that item on that day. Use the maintenance poster included with your South Bend Lathe as a quick reference guide when performing the maintenance items.

Annual Service

Once every year, or more often with heavy use, perform these service items. Keep track of when you last performed your annual service and when you'll need to perform it again.

Date of last annual service:	
Date of next annual service:	

Service Item	☑
Change Gearbox Oil	
Change Headstock Oil	
Change Apron Oil	

Make copies of this page to use each month. Keep each chart as a maintenance record for your South Bend Lathe.

SOUTH BEND®

(360) 734-1540 • FAX: (360) 676-1075
www.southbendlathe.com

Lubrication

Headstock

Oil Type .. Mobil DTE Light or ISO 32 Equivalent
Oil Amount ..... 7.5 Liters
Check/Add Frequency ..... Daily
Change Frequency .....Annually

The headstock lubrication system is the most important lubrication system on the machine. It consists of an electric oil pump, a low oil pressure kill switch, a holding tank, oil lines, and a distribution manifold. The headstock has a series of oil lines that direct oil to key locations, such as the spindle bearings and headstock gearing, to ensure that they always remain well lubricated.

The oil pump automatically turns ***ON*** and begins oiling the headstock components when the main power switch is turned ***ON*** and the emergency stop button is reset. The oil is pumped before the spindle is started to protect the spindle bearings against potential damage from dry starts.

Checking & Adding Oil

The sight glass on the side of the headstock oil tank, shown in **Figure 109**, shows the oil level and temperature; the bottom line represents the minimum oil level and the top line represents the maximum oil level. The lathe must be powered down and stopped when to get an accurate reading on the oil level.

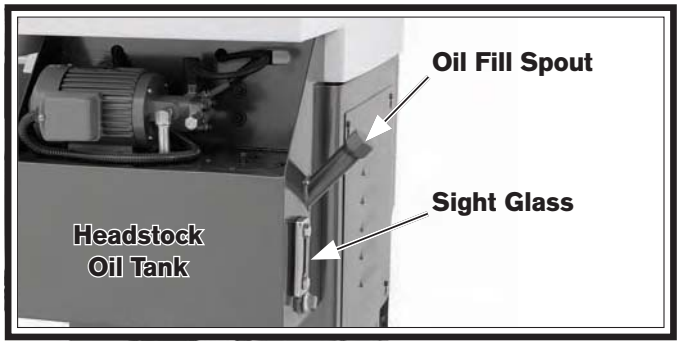

Figure 108. Headstock oil tank & components.

When the oil level approaches the minimum line, add enough oil to bring it up to the maximum line.

Monitoring Oil Temperature

During operations, regularly monitor the oil temperature shown in the sight glass in **Figure 109**. The temperature of the headstock oil must remain under 170° F. or the oil will start to overheat and break down, causing it to lose its lubrication properties.

Under normal conditions, the oil should not reach 170° F.; however, if it does, shut down the machine and allow the oil to cool. Investigate why the oil is getting so hot. Possibilities may be poor ventilation, excessive work loads, poor oil quality, oil is breaking down (losing lubricity) due to long term use, or extreme work site temperatures.

If possible, correct the conditions causing the oil to get hot. If the oil is old or you suspect it is of poor quality, change it. If the work loads or working environment are extreme, reduce the duty cycle of the lathe to allow the oil to cool down when it gets hot.

If the oil temperature ever exceeds 170° F., change it as soon as possible to make sure the spindle bearings have high quality lubrication.

Verifying Oil Pump Operation

To prevent costly damage to the headstock gears and bearings, a kill switch will shut the lathe down if the oil pump stops working or the oil level is too low. You can verify that the pump is working by looking at the sight glass shown in **Figure 109**. When working correctly, oil can be seen flowing across the sight glass.

Figure 109. Location of the headstock oil sight glass.

Cleaning Pump System & Changing Oil

The headstock oil pump system must be cleaned and the oil changed after the break-in period and then annually (or every six months with hard service or extreme working conditions).

To clean the oil pump system:

1. DISCONNECT LATHE FROM POWER!

2. Remove the cap from the fill spout shown in **Figure 110**.

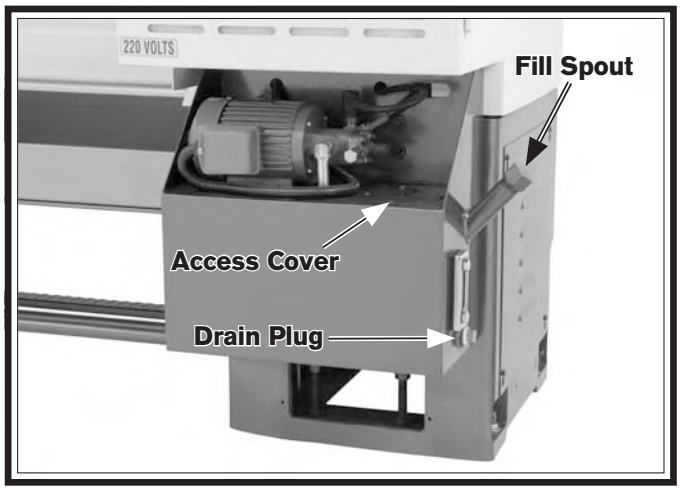

Figure 110. Headstock oil tank component locations.

3. Place at least a 3-gallon drain pan under the tank and remove the drain plug to empty the oil into the pan.

4. Clean away any dust, debris, metal shavings, or grime from the access cover.

5. Using a 4mm hex wrench, remove the four access cover cap screws, then use the cap screw in the center as a handle and lift off the access cover.

6. Put on splash-proof safety glasses, rubber gloves, and a respirator rated for fumes.

7. Using mineral spirits and rags, wipe down the inside of the tank to clean it. Make sure to soak up any excess mineral spirits with a dry rag, so it does not stay in the tank.

8. After the tank is completely cleaned out, unthread the screen from the bottom of the pump suction pipe (see **Figure 111**), and remove the screen from the tank.

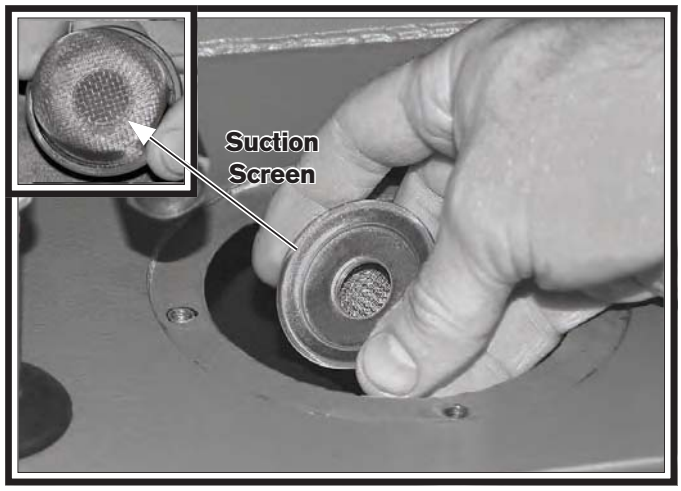

Figure 111. Suction screen removal.

9. Clean the suction screen thoroughly with mineral spirits and compressed air.

10. Re-install the suction screen.

Tip: Consider placing one or two magnets at the bottom of the tank to collect any fine metal particles generated by the headstock drive train. This will make cleaning easier the next time around and ensure that more metal particles are kept out of the headstock oil.

11. Re-install the drain plug.

12. Refill the tank with oil (refer to **Page 56** for the recommended type and amount of oil to use).

13. Replace the fill spout plug.

Gearbox

Oil Type ..... Mobil Vactra 2 or ISO 68 Equivalent
Oil Amount ..... 1 Liter
Check/Add Frequency ..... Daily
Change Frequency ..... Annually

Checking & Adding Oil

The sight glass shown in **Figure 112** shows the oil level in the gearbox. At the maximum level, the oil fills approximately ¾ of the sight glass. At the minimum level, the oil only fills ¼ of the sight glass. Check the oil level daily. When the oil approaches the minimum level, add enough oil to bring it up to the maximum level.

Figure 112. Gearbox sight glass location.

Changing Oil

The gearbox oil must be changed after the break-in period and then annually (or every six months with hard service or extreme working conditions). **Figure 113** shows fill and drain plugs used when changing the gearbox oil.

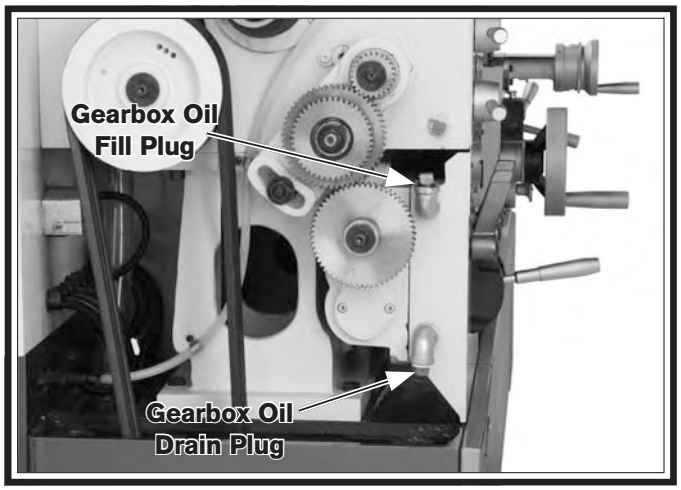

Figure 113. Location of gearbox fill and drain plugs.

Apron

Oil Type ..... Mobil Vactra 2 or ISO 68 Equivalent
Oil Amount ..... 1 Liter
Check/Add Frequency ..... Daily
Change Frequency ..... Annually

Checking & Adding Oil

The sight glass shown in **Figure 114** shows the oil level in the apron. At the maximum level, the oil fills approximately ¾ of the sight glass. At the minimum level, the oil only fills ¼ of the sight glass. Check the oil level daily. When the oil approaches the minimum level, add enough oil to bring it up to the maximum level. This oil is also used by the way pump to lubricate the ways and slides.

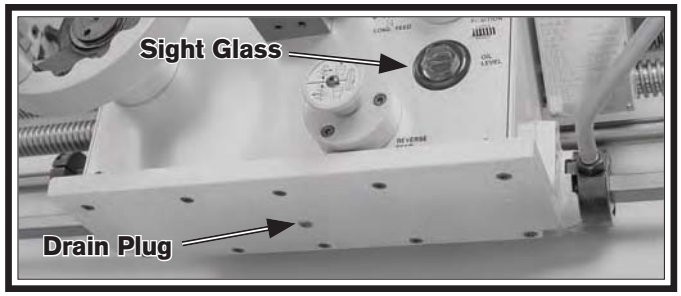

Figure 114. Location of apron drain plug & sight glass.

Changing Oil

The oil in the apron reservoir must be changed after the break-in period and then annually (or every six months with hard service or extreme working conditions). The drain plug is shown in **Figure 114** and the fill plug is shown in **Figure 115**.

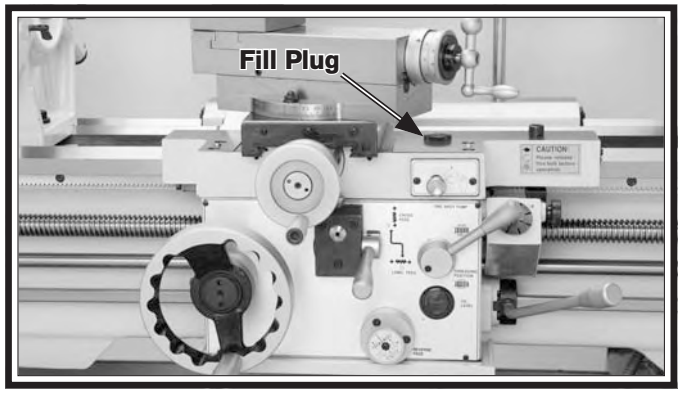

Figure 115. Location of fill plug for apron oil reservoir.

Lead Screw & Feedrod Bearings

Oil Type ..... Mobil Vactra 2 or ISO 68 Equivalent
Oil Amount ..... 1 Liter
Check/Add Frequency ..... Daily

Checking & Adding Oil

To check the oil level, remove the fill plug and look inside the reservoir (**Figure 116**). The oil level must remain full to keep the leadscrew bearing adequately lubricated. Pour oil in the reservoir until it is as full as possible without overflowing.

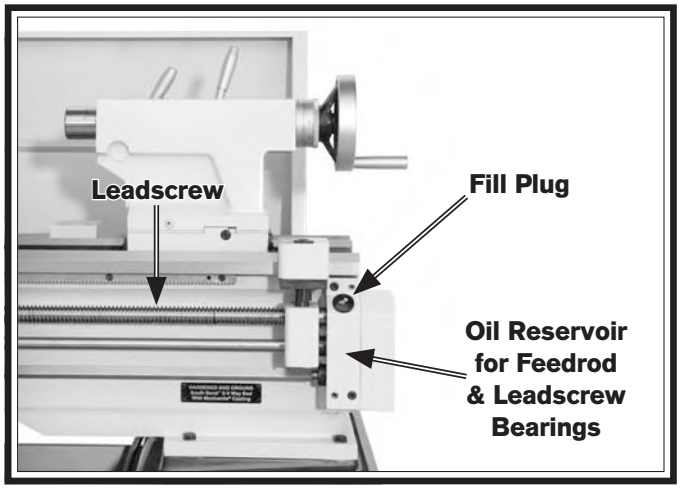

Figure 116. Leadscrew lubrication.

Lead Screw

Oil Type ..... Mobil Vactra 2 or ISO 68 Equivalent
Oil Amount ..... As Needed
Lubrication Frequency..... Daily

Before lubricating the leadscrew (**Figure 116**), clean it first with mineral spirits. A paint brush works well to help clean out the threads. Make sure to move the carriage out of the way, so you can clean the entire length of the leadscrew.

Apply oil along the length of the leadscrew. Use a paint brush to make sure the oil is evenly applied and down in the threads.

Ways & Slides

The way pump shown in **Figure 117** lubricates the saddle and cross slide way guides with the oil from the apron reservoir.

To use the way pump to lubricate the ways, pull the pump knob out for two or three seconds and then push it in. The pump draws oil from the apron reservoir and then forces it through drilled passages to the way guides.

Repeat this process and move the carriage left/right and the cross slide forward/backward to distribute oil along the way guides.

Lubricate the guides once before and once after operating the lathe. If the lathe is in a moist or dirty environment, increase the lubrication interval and make sure to keep the oil level full.

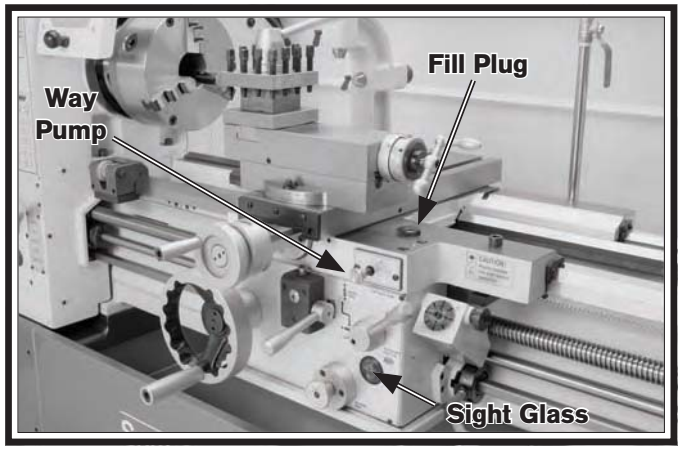

Figure 117. Location of way pump, fill plug, and sight glass on the apron.

Unpainted & Machined Surfaces

Besides the ways and leadscrew, all other unpainted and machined surfaces should be wiped down daily to keep them rust-free and in top condition. This includes the top of the saddle, the cross slide, compound slide, tool post, chuck, feedrod, and any other surface you can find that could be vulnerable to rust if left unprotected (this especially includes any parts that may be exposed to water soluble cutting fluids). Typically with these parts, a thin film of oil is all that is necessary for protection. Any quality metal protectant can be used to protect machined surfaces, including either of the oils you use elsewhere in the lathe.

Ball Oilers

Oil Type .. Mobil DTE Light or ISO 32 Equivalent
Oil Amount .....1 or 2 Drops
Lubrication Frequency.....Daily

This lathe has five ball oiler locations (see **Figures 118–119**) that should be oiled on a daily basis. In order to properly squirt oil into the ball oiler mechanisms, you will need an oil can or gun.

Figure 118. Ball oiler locations.

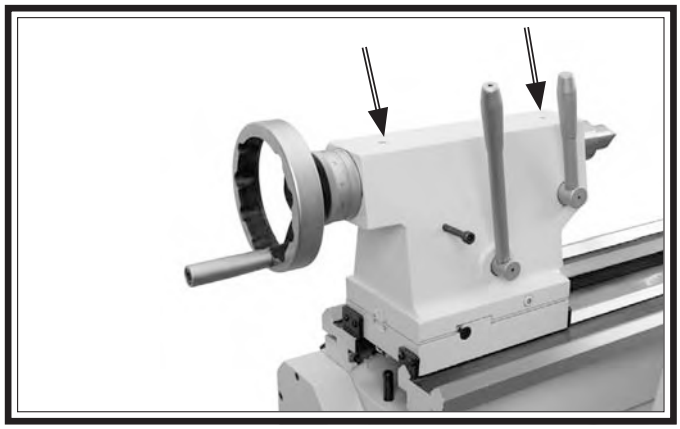

Figure 119. Tailstock ball oiler locations.

To lubricate the ball oilers, clean the outside surface to remove any dust or grime, push the ball with the tip of the oil can nozzle, and squirt a small amount inside. If the lathe is in a moist or dirty environment, increase the oiling interval.

Cleaning Electrical Box Filter

The door of the electrical box contains an air filter (**Figure 120**) to prevent dust from entering the box as the cooling fan pulls in cool air to reduce heat.

The air filter should be cleaned on a monthly basis to ensure proper air circulation in the electrical box. A clogged air filter will not allow the cooling fan to do its job, which could result in a decreased lifespan of the electrical components.

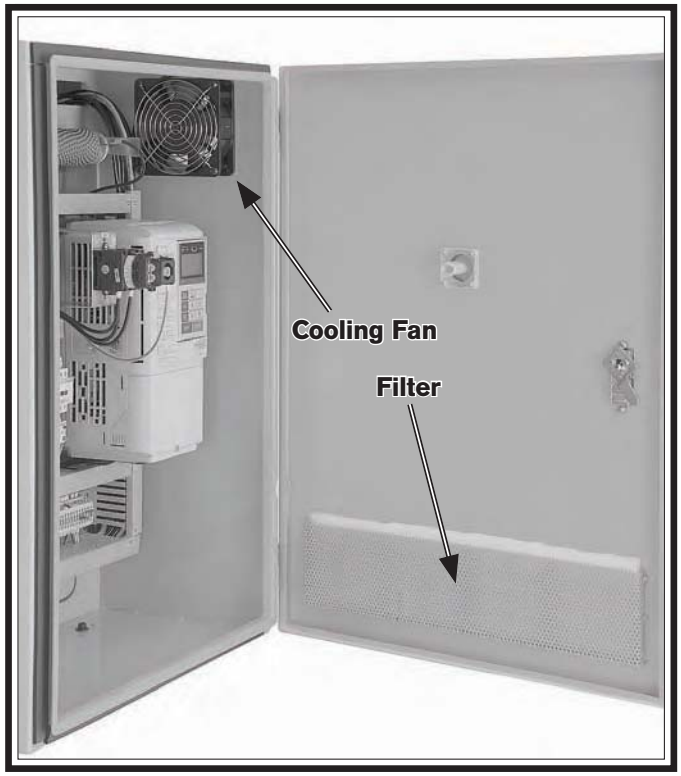

Figure 120. Electrical box cooling fan and filter.

To clean the filter:

1. DISCONNECT LATHE FROM POWER!
2. Put on a dust mask or respirator to reduce your risk of inhaling fine dust.
3. Open the electrical box door, and remove the electrical box air filter.
4. Use compressed air to blow dust out of the filter. Make sure to blow the dust from the clean side (the side facing inward) of the filter so you do not drive dust farther into the filter.
5. Re-install filter and close electrical box door.

End Gearing

Grease Type..... NLGI#2
Frequency .....Annually or When Swapping

The end gears, shown in **Figure 121**, should always have a thin coat of heavy grease to minimize corrosion, noise, and wear. Care must be taken to avoid over-greasing because excess grease may be flung onto the V-belts, which will reduce optimal power transmission from the motor.

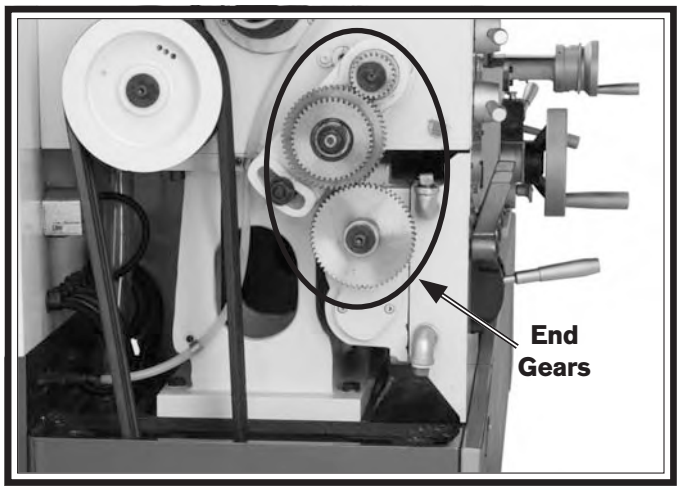

Figure 121. Location of end gears that require grease.

Handling & Care

Make sure to clean and lubricate any gears you install or swap. Unless you are very careful during handling and storage, the coating of grease on the gears will easily pickup dirt or debris, which can then spread to the other gears and increase the rate of wear.

Make sure the cover remains installed whenever possible to keep the gears free of dust or debris from the outside environment.

Lubricating

1. DISCONNECT LATHE FROM POWER!

2. Remove the headstock side cover and all the end gears shown in **Figure 121**.

3. Clean the end gears thoroughly with mineral spirits to remove all the old grease. Use a small brush if necessary to clean between the teeth.

4. Clean the shafts from which the end gears were removed, and wipe up any old grease splatters in the vicinity and on the inside of the headstock cover.

5. With clean hands, apply a thin layer of grease on the gears. Make sure to get grease between the gear teeth, but not so much that it fills the voids between the teeth.

6. Install the end gears and mesh them together with an approximate backlash of 0.005". Once the gears are meshed together, apply a small dab of grease in the crux of where the gears mesh together—this grease will spread around when the gears start moving and re-coat any areas scraped off during installation.

Annual Maintenance

Once a year, remove all the end gears, clean them thoroughly, and apply a new coating of grease. Even if the headstock side cover has been kept in place throughout the year, it is still possible for dust from the V-belts to build-up in the grease, and the grease may also start to break down with extended or heavy use.

Cutting Fluid System

The cutting fluid system consists of a fluid tank, pump, and flexible nozzle. The pump pulls fluid from the tank and sends it to the valve, which controls the flow of cutting fluid to the work area. When the valve is opened or closed, the fluid comes out of the nozzle and drains through the chip drawer and into the catch tray and then into the tank where it is picked up again by the pump. **Figure 122** shows many of these components and their locations.

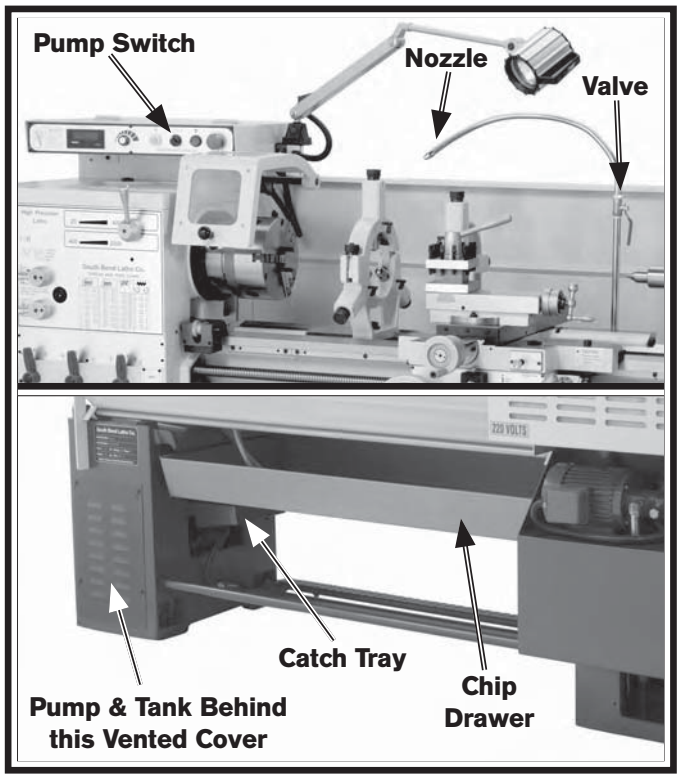

Figure 122. Cutting fluid system components and locations.

Although most swarf from machining operations falls into the chip tray and stays there, some small chips drain into the tank. The pump uses a screen to prevent it from picking up the small swarf that ends up in the tank.

Since the swarf is spread throughout the coolant system, cleaning the system on a regular basis is a requirement to maintain the life of the pump.

Hazards

As some cutting fluid ages, dangerous microbes can proliferate and create a biological hazard. The risk of exposure to this hazard can be greatly reduced by replacing the old cutting fluid on a monthly basis, as indicated in the maintenance schedule.

The important thing to keep in mind when working with the cutting fluid is to minimize exposure to your skin, eyes, and respiratory system by wearing the proper PPE (personal protective equipment), such as splash-resistant safety glasses, long-sleeve gloves, protective clothing, and a NIOSH approved respirator.

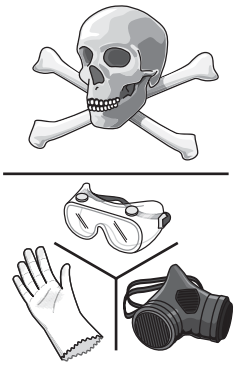

⚠WARNING

BIOLOGICAL & POISON HAZARD!

Use the correct personal protection equipment when handling cutting fluid. Follow federal, state, and fluid manufacturer requirements for proper disposal.

Adding Fluid

1. DISCONNECT LATHE FROM POWER!

2. Remove the vented cover and slide the tank out, as shown in **Figure 123**.

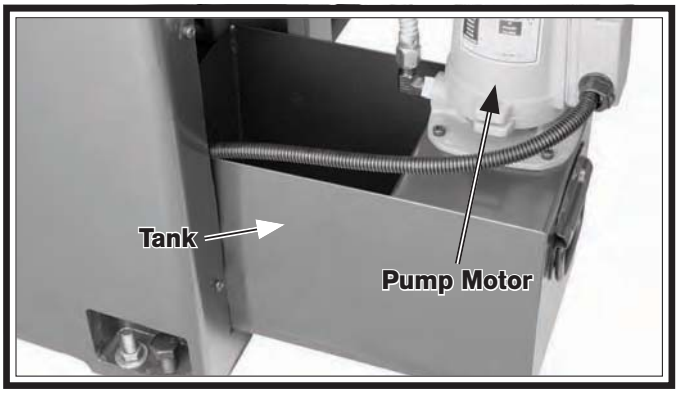

Figure 123. Cutting fluid pump and tank.

3. Pour cutting fluid in the tank until it is nearly full.

4. Slide the tank back into the base and replace the vented cover.

Changing Cutting Fluid

When you replace the old cutting fluid, take the time to thoroughly clean out the chip drawer, catch tray, and fluid tank. The entire job only takes about a ½ hour when you are prepared with the proper materials and tools. Used cutting fluid is hazardous! Follow all applicable regulations for storage and disposal.

Items Needed: **Qty**

Safety Wear .....See **Hazards** section on **Page 62**
New Cutting Fluid ..... 3 Gallons
Empty 5 Gallon Bucket w/Lid 2
Phillips Screwdriver #2 1
Wrench ¾" 1
Disposable Shop Rags ..... Approximately 6
Hose or Tubing ⅝" x 60" (optional) ..... 1 Piece
Magnets (optional) ..... As Many As Desired

To change the cutting fluid:

1. Position the coolant nozzle over the splash guard, so it is pointing behind the lathe. If you have the optional hose, connect it to the end of the coolant nozzle now.

2. Place the 5-gallon bucket behind the lathe and underneath the coolant nozzle. If you have the optional hose, place the hose in the bucket. Otherwise, you may need to hold the bucket up to the coolant nozzle to prevent coolant from splashing outside of the bucket.

3. Turn the cutting fluid pump ***ON*** (or have another person turn it ***ON*** if you are holding the bucket), and pump the old cutting fluid out of the tank. Turn the pump OFF immediately after fluid stops flowing.

> ***NOTICE***
> **Running the pump without adequate fluid in the tank may permanently damage it. This is abuse and not covered by the warranty.**

4. DISCONNECT LATHE FROM POWER!

5. Remove the vented cover shown in **Figure 122** and slide the tank half way out of the base, as shown in **Figure 123**.

   — If necessary, disconnect fluid hose from pump, where shown in **Figure 124**.

Note: The electrical conduit was purposely left long, so the tank can be removed without disconnecting wires from the pump. Do not disconnect electrical lines.

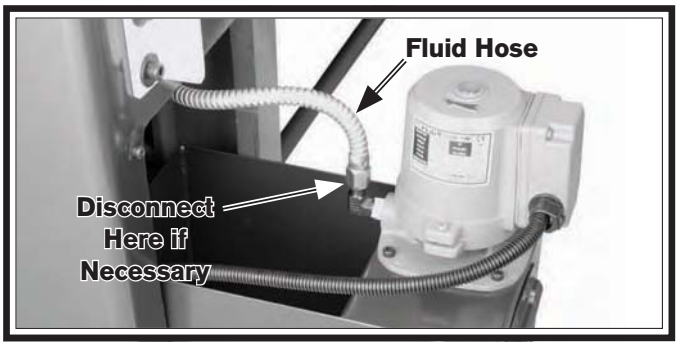

Figure 124. Fluid hose that may need to be disconnected in order to remove tank for cleaning.

6. Pour out the remaining cutting fluid into your 5-gallon bucket and close the lid.

7. Wipe up the layer of swarf/residue on the bottom of the tank and put the waste in the second 5-gallon bucket. Flush out the tank with soapy water and drain into the second 5-gallon bucket.

8. Slide the tank partially into the base and reconnect fluid hose (if removed).

Tip: Leave one or more magnets at the bottom of the tank to collect metal chips and make cleanup easier next time.

9. Refill the tank with new cutting fluid, then slide the tank completely into the base.

10. CONNECT LATHE TO POWER.

11. Open the valve on the cutting fluid nozzle.

12. Turn the cutting fluid pump ***ON*** to verify that fluid cycles properly, then turn it ***OFF***.

Note: It may take a few seconds for the pump to start circulating fluid; however, if fluid does not start coming out within the first minute, turn the pump ***OFF*** so you do not burn out the pump motor. Try priming the pump manually by pour cutting fluid down into the nozzle, then repeat **Step 13**.

Machine Storage

If the machine is not properly prepared for storage, it may develop rust or corrosion. If decommissioning this machine, use the steps in this section to ensure that it remains in good condition for later use.

To prepare your machine for short-term storage (up to a year):

1. Pump out the old cutting fluid, and flush the lines and tank with warm, soapy water.

2. DISCONNECT LATHE FROM POWER!

3. Thoroughly clean all unpainted, bare metal surfaces, then apply a liberal coat of way oil.

4. Lubricate the machine as outlined in the lubrication section.

5. Cover and place the machine in a dry area that is out of direct sunlight and away from hazardous fumes, paint, solvents, or gas. Fumes and sunlight can bleach or discolor paint and make plastic guards cloudy.

6. Once or twice a month, depending on the ambient humidity levels in the storage environment, wipe down the machine as outlined in **Step 3**.

7. Every few months, start the machine and run all gear-driven components for a few minutes. This will keep the bearings, bushings, gears, and shafts well lubricated and protected from corrosion, especially during the winter months.

To prepare your machine for long-term storage (a year or more):

1. Run the lathe for 10 minutes to bring the gearboxes to operating temperature, then drain and refill the all gearboxes with fresh oil.

Note: During extended storage (more than two years), any component above the oil level may rust from condensation. We recommend overfilling any sealed gearbox. However, over time there will be some seepage around some shafts and seals. If any gearbox is overfilled make sure to put a tag on the controls as a reminder for the maintenance person to correct the oil level before starting the machine. If a gearbox cannot be overfilled, every few months manually rotate the shaft or spindle to coat any exposed gears with oil.

2. Pump out the old cutting fluid, and flush the lines and tank with warm, soapy water.

3. DISCONNECT LATHE FROM POWER!

4. Thoroughly clean all unpainted, bare metal surfaces, then apply a liberal coat of way oil, a heavy grease, or rust preventative. Take care to ensure these surfaces are completely covered but that the rust preventative or grease is kept off of painted surfaces.

5. Lubricate the machine as outlined in the lubrication section.

6. Loosen or remove machine belts so they do not become stretched during the storage period. (Be sure to also affix a maintenance note near the power button as a reminder that the belts have been loosened or removed.)

7. Place a few moisture absorbing desiccant packs inside of the electrical box.

8. Cover and place the machine in a dry area that is out of direct sunlight and away from hazardous fumes, paint, solvents, or gas. Fumes and sunlight can bleach or discolor paint and make plastic guards cloudy.

Backlash Adjustment

Backlash is the amount of free play felt while switching rotation directions with the handwheel. This can be adjusted on the compound and cross slide leadscrews.

NOTICE

Reducing backlash to less than 0.001" is impractical. Avoid the temptation to overtighten the backlash set screw while adjusting. Overtightening leads to accelerated wear of the wedge, nut, and leadscrew.

Compound Leadscrew

Tools Needed:	Qty
Hex Wrench 3mm	1

Backlash is adjusted by tightening the set screws shown in **Figure 125**. When these screws are adjusted against the leadscrew nut, they offset part of the nut to remove play between the nut and leadscrew.

If you end up adjusting the nut too tight, loosen the set screws, tap the compound a few times with a rubber or wooden mallet, and turn the handle slowly back and forth until it moves freely.

To readjust the backlash, rock the handle back and forth, and tighten the screws slowly until the backlash is at approximately 0.001" as indicated on the handwheel dial.

Figure 125. Compound slide backlash adjustment set screws.

Cross Slide Leadscrew

Tools Needed:	Qty
Hex Wrench 3mm	1
Hex Wrench 5mm	1

Backlash is adjusted by loosening all four cap screws shown in **Figure 126**, and then tightening the center set screw, which pushes down on a wedge and forces the nut apart, taking up lash in the nut and leadscrew.

If you end up adjusting the nut too tight, loosen the set screw, tap the cross slide a few times with a rubber or wooden mallet, and turn the handle slowly back-and-forth, until the handle turns freely.

To re-adjust the backlash, rock the handle back and forth and tighten the set screw slowly until the backlash is at approximately 0.001" as indicated on the handwheel dial.

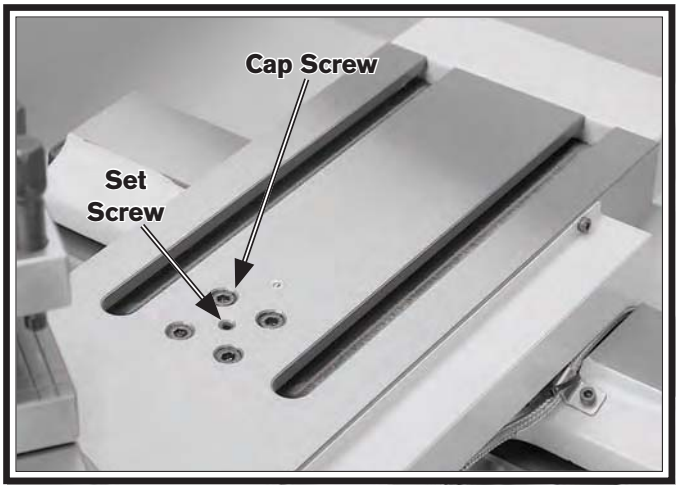

Figure 126. Cross slide backlash adjustment screws.

Leadscrew End Play Adjustment

After a long period of time, you may find that the leadscrew develops a small amount of end play. This lathe is designed so that leadscrew end play can be easily removed with adjustment.

Tools Needed:	Qty
Open End Wrench 1"	1
Hex Wrench 3mm	1
Hex Wrench 5mm	1

To remove leadscrew end play:

1. DISCONNECT LATHE FROM POWER!
2. Remove the three cap screws and end cover.
3. Loosen both retaining nut set screws shown in **Figure 127**.

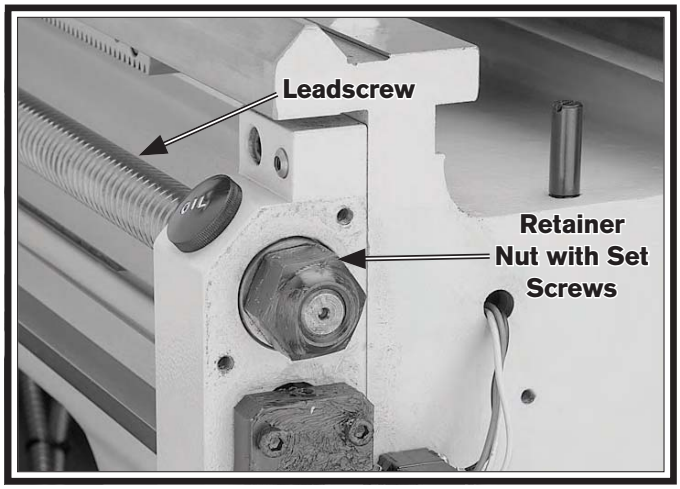

Figure 127. Leadscrew end play adjustment.

4. Engage the half nut lever.
5. Rotate the carriage feed handwheel back slightly and tighten the retaining nut at the same until the end play is removed.
6. Tighten both set screws and re-install the cover.

Gib Adjustment

The goal of adjusting the cross slide, tailstock, saddle, and compound gib screws is to remove sloppiness in the ways without over-adjusting them to the point where the slides become stiff and difficult to move.

In general, loose gibs cause poor finishes and tool chatter; however, over-tightened gibs cause premature wear on the slide, leadscrew, and nut, and are difficult to operate.

The gibs are tapered and held in position by a screw at each end. To adjust the gib, turn one screw a ¼ turn clockwise and the other screw a ¼ turn counterclockwise, so both screws move toward the same direction. Now test the feel of the sliding component by turning the handwheel, and adjust the gib screws as necessary to make it tighter or looser.

The gib adjustment process usually requires some trial-and-error. Repeat the adjustment process as necessary until you find the best balance between loose and stiff movement. Most machinists find that the ideal gib adjustment is one where a small amount of drag or resistance is present yet the handwheels are still easy to move.

Figures 128–131 show the location of the screws for each gib on this machine.

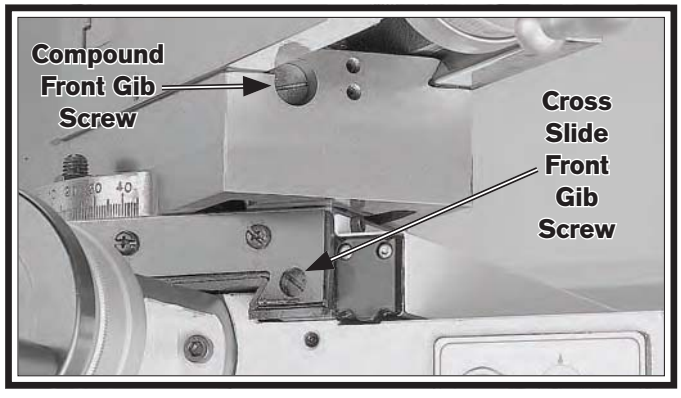

Figure 128. One of two cross slide and compound gib screws.

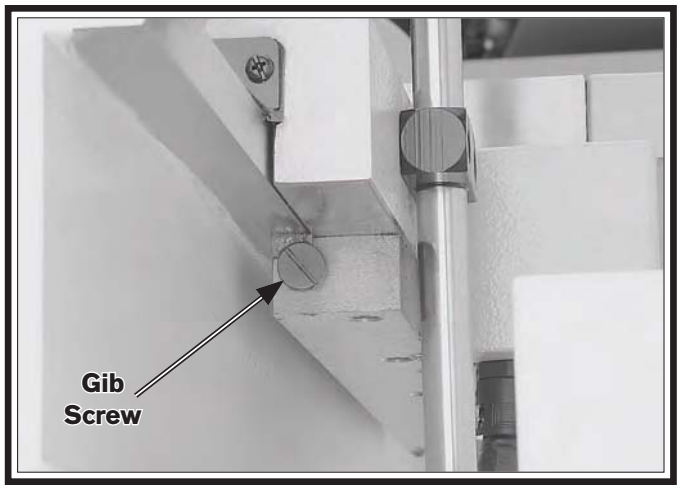

Figure 129. One of two rear saddle gib screws.

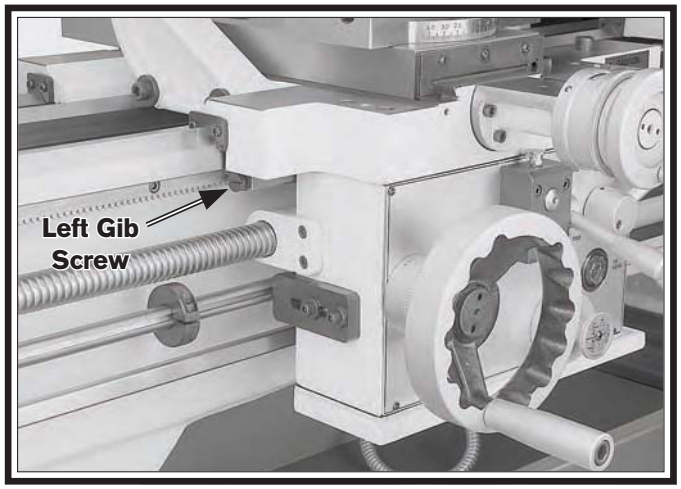

Figure 130. One of two front saddle gib screws.

Figure 131. One of two tailstock gib screws.

Half Nut Adjustment

The half nut mechanism can be tightened if it becomes loose from wear. The pressure exerted by the half nut is controlled by a gib similar to the one in the saddle, which is on **Page 66**. The half nut gib is adjusted with two set screws.

Tool Needed:	**Qty**
Hex Wrench 3mm	1

To adjust the half nut:

1. Disengage the half nut.

2. Remove the thread dial.

3. Turn the two half-nut adjustment set screws, shown in **Figure 132**, clockwise about an $\frac{1}{8}^{th}$ of a turn.

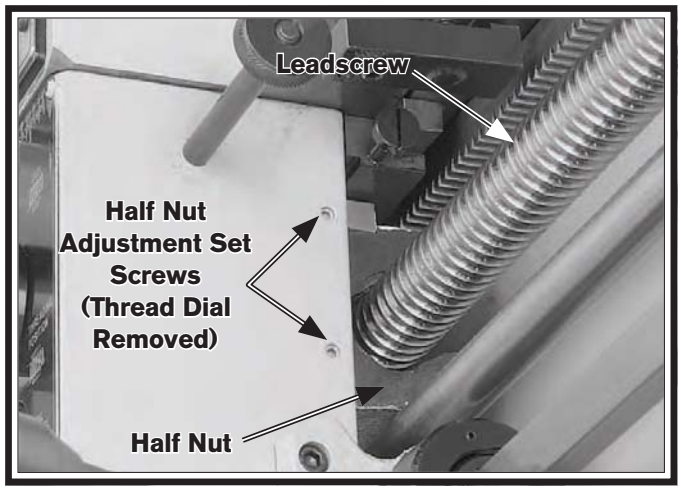

Figure 132. Half nut gib adjustment.

4. Engage/disengage the half nut several times and notice how it feels (you may need to move the carriage handwheel slightly to get the half nut to close).

   The half nut is correctly adjusted when it has a slight drag while opening and closing. The movement should not be too stiff or too sloppy.

5. Repeat **Steps 3–4**, if necessary, until you are satisfied with the half nut adjustment. (If the half nut becomes too stiff, turn the set screws counterclockwise to loosen it.

6. Re-install the thread dial.

Feedrod Clutch Adjustment

This lathe has an adjustable feed clutch that helps protect the drivetrain from overload. The feed clutch release point is adjusted at the factory. However, it can be easily adjusted depending on operator requirements.

Tools Needed: **Qty**
Phillips Screwdriver #2 1
Hex Wrench 3mm 1

To adjust the clutch release point:

1. DISCONNECT LATHE FROM POWER!

2. Remove the front and side feed access covers, as shown in **Figure 133**.

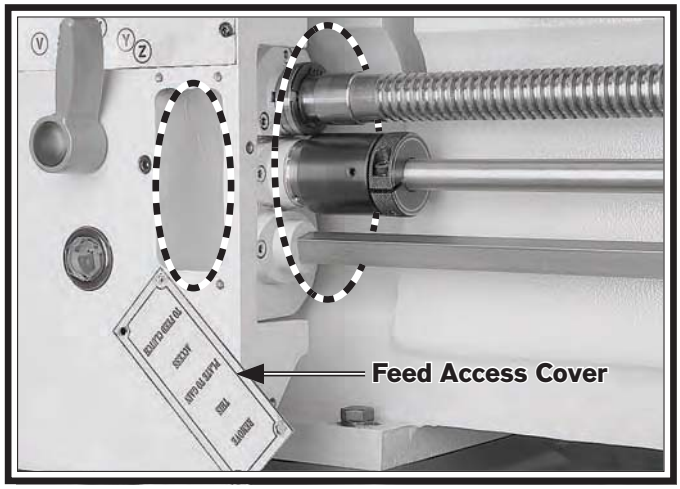

Figure 133. Feed access covers removed.

3. Remove the clutch collar set screw, as shown in **Figure 134**.

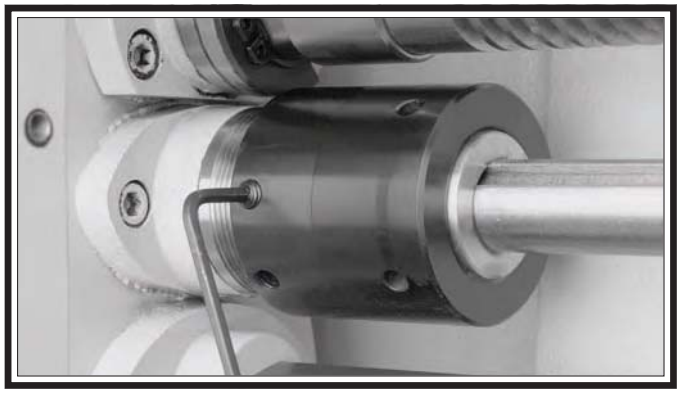

Figure 134. Removing set screw from clutch collar.

4. Insert the hex wrench into the collar adjustment hole shown in **Figure 135**, and use the wrench to rotate the clutch collar.

   — If you need to increase the release point, rotate the clutch collar upward.

   — If you need to decrease the release point, rotate the clutch collar downward.

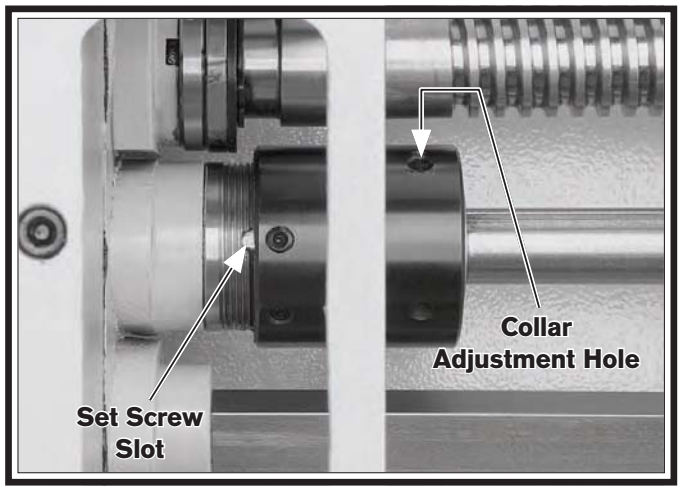

Figure 135. Feed clutch set screw alignment.

5. Line up the set screw hole in the clutch collar with the closest set screw slot that is cut into the feedrod (see **Figure 135**).

6. Install and tighten the set screw so it is fully seated in the slot.

7. Re-install both access covers.

V-Belts

V-belts stretch and wear with use, so check them on a monthly basis to ensure optimal power transmission. Replace all of the V-belts if any of them show signs of glazing, fraying, or cracking.

Tools Needed: **Qty**
Phillips Screwdriver #2 1
Open End Wrench 24mm..... 1

To adjust the V-belts:

1. DISCONNECT LATHE FROM POWER!

2. Remove the cover shown in **Figure 136**.

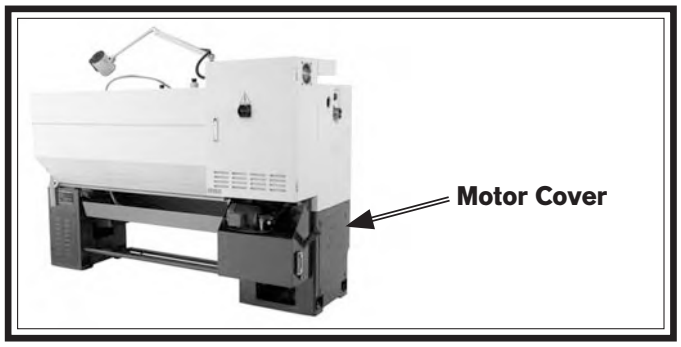

Figure 136. Location of motor cover.

3. Turn the hex nuts on the motor mount bolts shown in **Figure 137** to move the motor mount plate up or down and adjust the V-belt tension. When correctly tensioned, each belt should have about ¾" deflection when pressed firmly (see **Figure 137**).

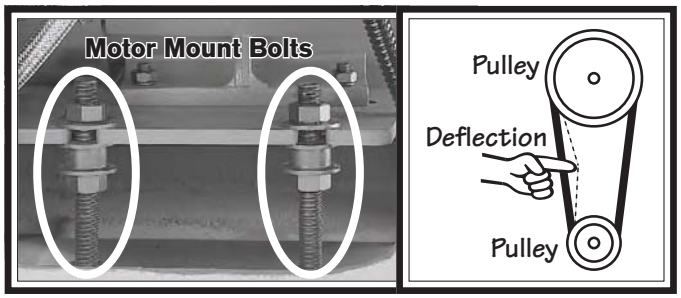

Figure 137. V-belt adjustment.

4. Firmly tighten the hex nuts (loosened in the previous step) against the motor mount plate to prevent it from moving out of adjustment during operation, then re-install the motor cover.

Brake & Switch

As the brake lining wears, the foot pedal develops more travel. If the brake band is not adjusted to compensate for normal wear, the limit switch will still turn the lathe off, but the spindle will not stop as quickly. It is especially important that the brake is kept properly adjusted so you can quickly stop the spindle in an emergency.

Tools Needed: **Qty**
Phillips Screwdriver #2 1
Hex Wrench 6mm 1

To adjust the brake and brake switch:

1. DISCONNECT LATHE FROM POWER!

2. Put on a respirator and eye protection to protect yourself from hazardous brake dust.

3. Remove the motor cover shown in **Figure 136**.

4. Measure the remaining brake band lining at the thinnest point, which is usually at the 8 o'clock position, as shown in **Figure 138**.

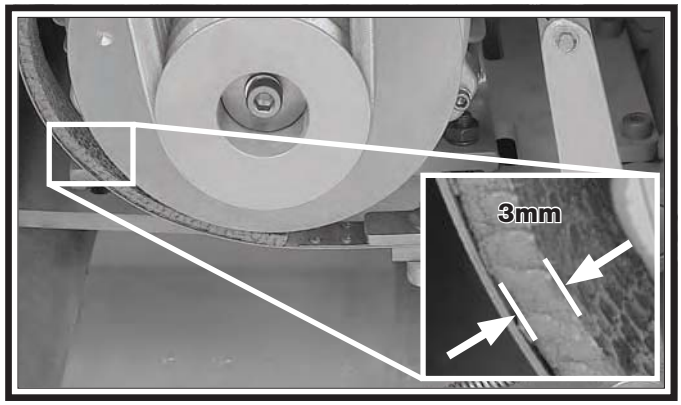

Figure 138. Minimum brake band lining thickness.

When the brake band is new, the lining is approximately 6mm thick. If the lining thickness wears to 3mm or less, the brake band must be replaced; otherwise, the rivets that secure the lining to the band will soon grind into the brake hub. If the hub becomes damaged, it must be replaced, which will substantially increase the cost of repair, compared to just replacing the brake band.

5. Remove pedal stop shown in **Figure 139**.

6. Move the brake band to the right one hole, and re-install the pedal stop, tightening it until it is just snug.

— If installing a new brake band, install the cap screw so there is one hole to the left for future brake adjustment.

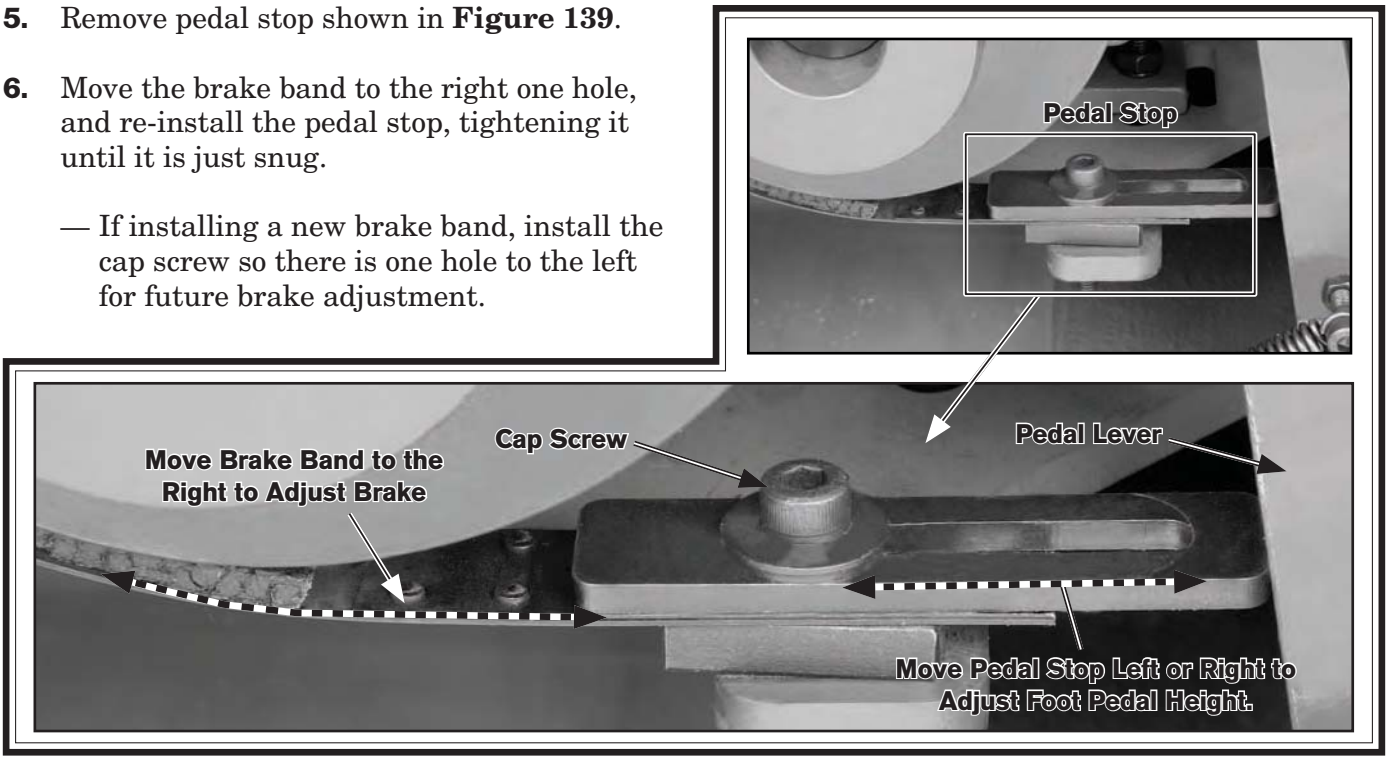

Figure 139. Brake linkage adjustments.

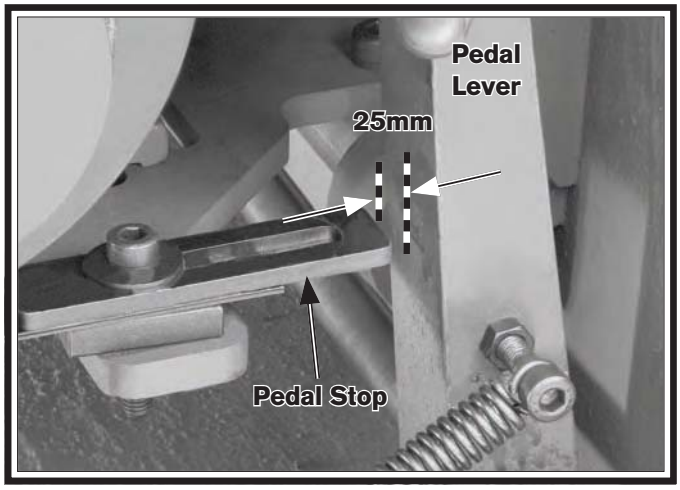

Figure 140. Pedal travel adjustment.

7. Firmly push the pedal lever (**Figure 140**) to the right until it stops and the brake band is fully clamped around the brake hub.

8. Tap the pedal stop into position so there is approximately a 25mm gap between the pedal lever and the stop (see **Figure 140**).

9. Tighten the cap screw on the pedal stop.

10. Locate the motor kill switch (shown in **Figure 141**) at the tailstock end of the lathe.

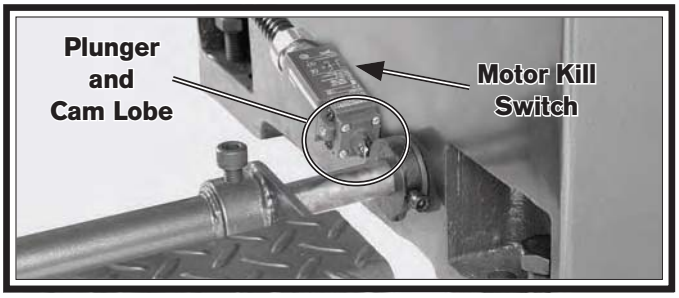

Figure 141. Motor kill switch.

11. Push the pedal lever down to verify that the cam lobe pushes the kill switch plunger in. When pushed in, the switch should click.

— If the switch does not click, loosen the switch mounting screws, push the pedal all the way down, and move the switch closer to the lobe until it clicks. Secure the switch in place at this location.

— In the released position, there should be an approximate 3mm gap between the plunger roller and the lobe.

12. Re-install the cover, test the brake operation.

Leadscrew Shear Pin Replacement

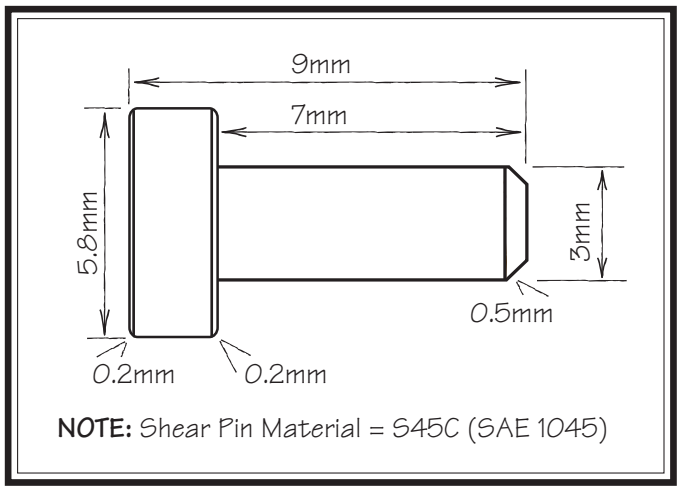

Figure 142. Shear pin specifications.

Tools Needed:	**Qty**
Phillips Screwdriver #2	1
External Retaining Ring Pliers #1	1
Magnet	1
Safety Glasses	1

To replace the shear pin:

1. DISCONNECT LATHE FROM POWER!

2. Remove the front and side feed access covers, as shown in **Figure 143**.

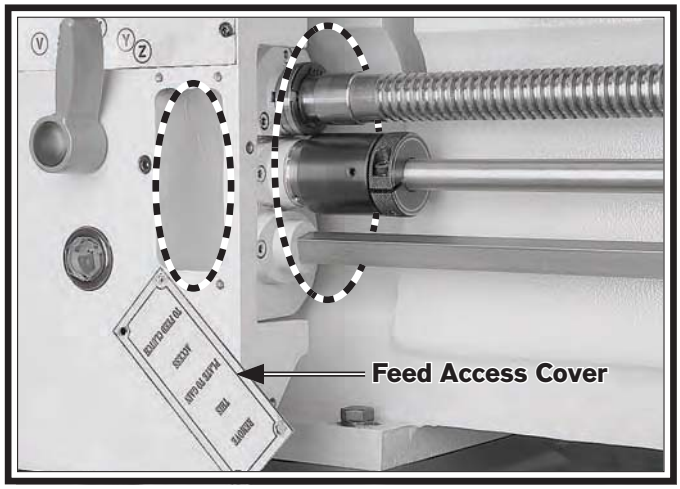

Figure 143. Feed access covers removed.

3. Rotate the shroud washer so the cutout lines up with the shear pin head, as shown in **Figure 144**.

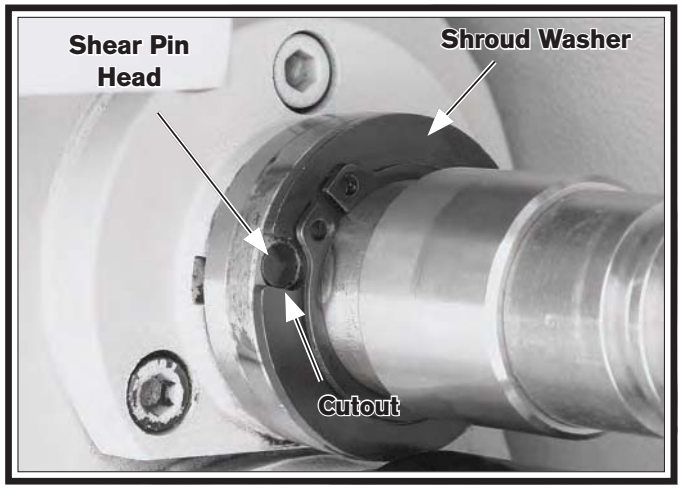

Figure 144. Shroud washer/pin alignment.

4. Put on safety glasses.

5. Remove the retaining ring from its groove and place it in the rear-most position away from the shroud washer.

6. Move the shroud washer away from the shear pin (to the rear position), as shown in **Figure 145**, so there is enough of a gap to remove the shear pin.

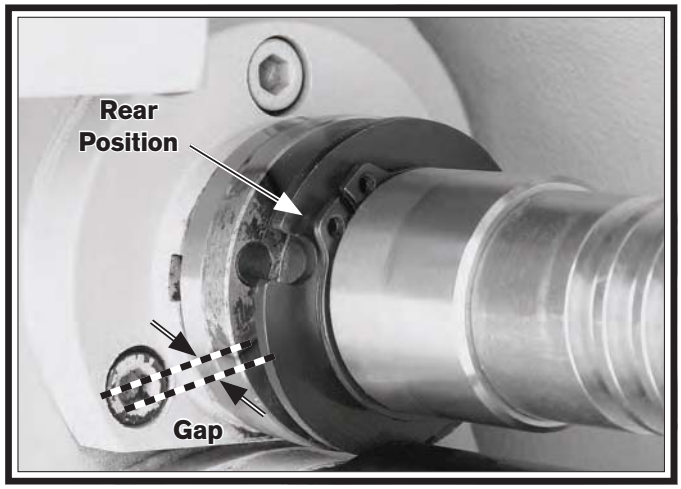

Figure 145. Shear pin access.

7. Use the magnet to remove the shear pin head, then rotate the lathe spindle to line up the inner and outer bores, as shown in **Figure 146**. Next, use the magnet to remove the other half of the broken shear pin when it becomes visible.

Figure 146. Aligned shear pin bores.

8. Insert a blow gun tip into the shear pin hole, blow out the hole with compressed air, and put a drop of oil in the hole.

9. Insert the new shear pin into the bore, as shown in **Figure 147**.

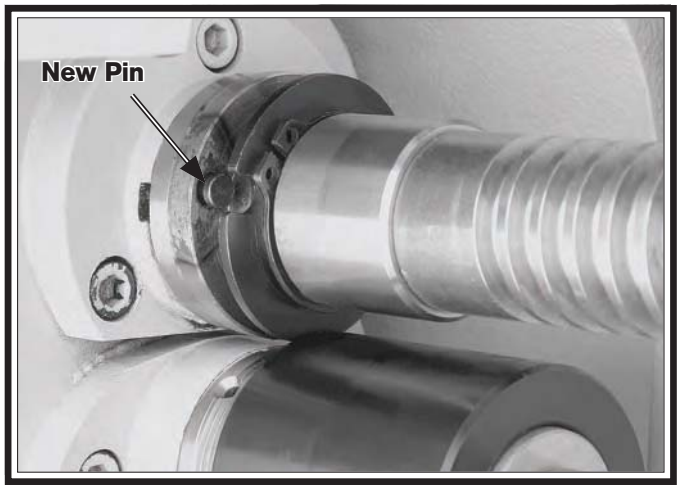

Figure 147. New shear pin installed in bore.

— If the pin does not freely slide into the bore, DO NOT hammer on the pin or you may permanently damage the shear mechanism and bore, making it nearly impossible to remove and install a new shear pin later. Instead, take the time to carefully line up the two bores. You may file a slight chamfer on the end of the pin to make it easier to insert.

10. With the pin completely seated in the bore and the head flush with the leadscrew shoulder, slide the shroud washer against the shoulder, then rotate the washer 180° until it covers the head of the shear pin, as shown in **Figure 148**.

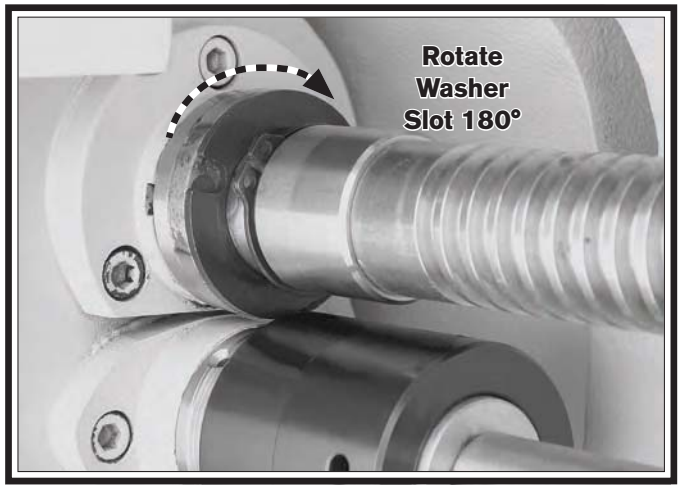

Figure 148. Shroud washer positioning.

11. Using retaining ring pliers, return the retaining ring to its groove, and position the retaining ring ears over the shear pin head, as shown in **Figure 149**, to prevent the shear pin from falling out—if the shroud washer rotates into alignment with the pin access groove lines.

Figure 149. Retaining ring positioned with ears in front of pin access groove, so pin cannot fall out.

12. Re-install the access covers.

Gap Removal & Installation

A portion of the lathe bed directly under the spindle, the gap insert (**Figure 150**), can be removed to create additional space for turning large diameter parts.

The gap insert was installed, then ground flush with the bed at the factory to ensure precise fit and alignment. Therefore, if the gap insert is removed, it may be difficult to re-install with the same degree of flushness and accuracy as when installed at the factory.

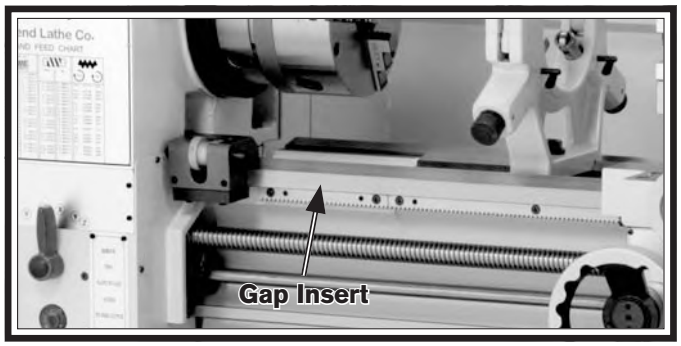

Figure 150. Gap insert that can be removed from bed.

Tools Needed:	Qty
Hex Wrenches 4, 6, 8mm	1 Each
Wrench 17mm	1

To remove the gap:

1. Remove the four gap bed cap screws, shown in **Figure 151**, that secure the gap insert to the bed.

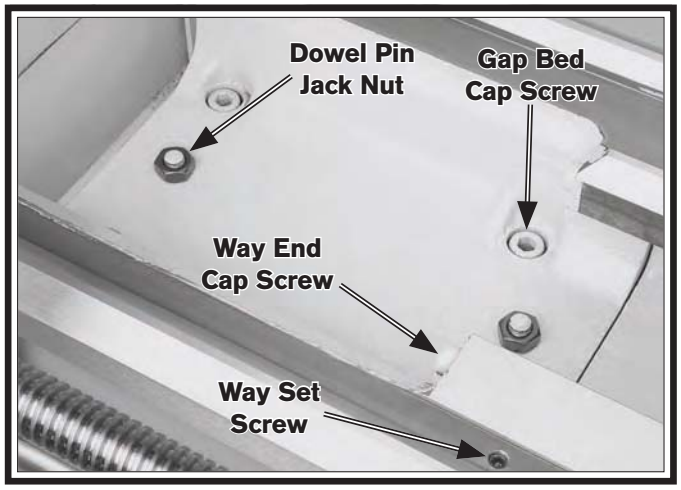

Figure 151. Fasteners holding gap in place.

2. Remove the two way end cap screws and way set screws shown in **Figure 151**.

3. Tighten the two dowel pin jack nuts (**Figure 151**) until the pins are pulled free from the gap insert.

4. Tap the outside of the gap insert with a dead blow hammer to loosen, then remove it.

To re-install the gap:

1. Use mineral spirits and a clean lint-free rag to clean the mating surfaces of the gap, bed, and ways. If necessary, stone the mating surfaces to remove scratches, dings, or burrs.

2. Wipe a thin layer of light machine oil on the mating surfaces.

3. Place the gap insert into the gap and use a block of wood or dead-blow hammer to align the insert with the lathe bed.

4. Back off the dowel pin jack nuts, and tap the dowel pins back into their respective holes until seated. This process will further help align the gap insert and bed mating surfaces.

5. Install all fasteners (except the way set screws) and lightly snug them in place.

6. Mount a base-mounted dial indicator to the top of the saddle to indicate alignment. First test the peak of the two prisms the saddle rides on, then test the flanks of the prisms. Jack the insert up or down by tightening or loosening the gap bed cap screws.

7. Alternately tighten the fasteners and tap the side of the gap insert into alignment.

8. Inspect the gap position 24-hours later to make sure the gap is still aligned, adjust if necessary, then install the two way set screws.

If you need replacement parts, or if you are unsure how to do any of the solutions given here, feel free to call us at (360) 734-1540.

Symptom	Possible Cause	Possible Solution
Machine does not start or a circuit breaker trips.	**1.** (First time operation only) Lathe is wired out of phase.	**1.** Correct out-of-phase wiring (refer to **Page 17** for details).
	2. Emergency stop push-button is engaged or at fault.	**2.** Rotate button clockwise until it pops out to reset it for operation; replace if not working properly.
	3. Spindle ON/OFF switch is at fault.	**3.** Move the spindle ON/OFF lever to ON; replace bad switch.
	4. Power supply is switched OFF at main power switch or breaker.	**4.** Make sure main power switch and circuit breaker are turned ON.
	5. Wall fuse/circuit breaker is blown/ tripped; short in electrical system; start-up load too high for circuit.	**5.** Verify circuit is rated for machine amp load; troubleshoot and repair cause of overload; replace weak breaker; find/repair electrical short.
	6. Fuse has blown in machine electrical box due to thermal overload.	**6.** Replace fuse; determine if overload is due to heavy operation; ensure power source has high enough voltage and cord is correctly sized.
	7. One or more kill switches are engaged.	**7.** Verify electrical box door, chuck guard, spindle, and brake switches are not engaged. Verify that headstock oil is pumping.
	8. Thermal overload relay has tripped.	**8.** Turn the thermal relay cut-out dial to increase working amps and push the reset pin. Replace if tripped multiple times (weak relay).
	9. Motor connection wired incorrectly.	**9.** Correct motor wiring connections.
	10. Oil pump motor operating, but no oil is seen pumping in sight glass.	**10.** Clean clogged tank suction screen, fill headstock oil tank to full, or replace oil pump.
	11. Limit/kill switch at fault.	**11.** Test all limit/kill switches and replace as necessary.
	12. Contactor not getting energized/has burnt contacts.	**12.** Test for power on all legs and contactor operation. Replace unit if faulty.
	13. Wiring is open/has high resistance.	**13.** Check for broken wires or disconnected/corroded connections, and repair/replace as necessary.
	14. Motor is at fault.	**14.** Test/repair/replace.
	15. Frequency drive unit is at fault.	**15.** Contact frequency drive manufacturer for list of authorized service providers in your area.
Loud, repetitious noise coming from lathe at or near the motor.	**1.** Pulley set screws or keys are missing or loose.	**1.** Inspect keys and set screws. Replace or tighten if necessary.
	2. Motor fan is hitting the cover.	**2.** Tighten fan, shim cover, or replace items.
Motor overheats.	**1.** Motor overloaded.	**1.** Reduce load on motor.
	2. Frequency drive unit is at fault.	**2.** Contact frequency drive manufacturer for list of authorized service providers in your area.
Motor is loud when cutting, or bogs down under load.	**1.** Excessive depth of cut or feed rate.	**1.** Decrease depth of cut or feed rate.
	2. Spindle speed or feed rate wrong for cutting operation.	**2.** Refer to the feeds and speeds charts in **Machinery's Handbook** or a speeds and feeds calculator on the internet.
	3. Cutting tool is dull.	**3.** Sharpen or replace the cutting tool.

Symptom	Possible Cause	Possible Solution
Entire machine vibrates upon startup and while running.	**1.** Workpiece is unbalanced.	**1.** Re-install workpiece as centered with the spindle bore as possible.
	2. Loose or damaged belt(s).	**2.** Tighten/replace the belt as necessary (**Page 69**).
	3. V-belt pulleys are not properly aligned.	**3.** Align the V-belt pulleys.
	4. Worn or broken gear present.	**4.** Inspect gears and replace if necessary.
	5. Chuck or faceplate has become unbalanced.	**5.** Rebalance chuck or faceplate; contact a local machine shop for help.
	6. Gears not aligned in headstock or no backlash.	**6.** Adjust gears and establish backlash.
	7. Broken gear or bad bearing.	**7.** Replace broken gear or bearing.
	8. Workpiece is hitting stationary object.	**8.** Stop lathe immediately and correct interference problem.
	9. Spindle bearings at fault.	**9.** Rest spindle bearing preload or replace worn spindle bearings.
Bad surface finish.	**1.** Wrong spindle speed or feed rate.	**1.** Adjust for appropriate spindle speed and feed rate.
	2. Dull tooling or poor tool selection.	**2.** Sharpen tooling or select a better tool for the intended operation.
	3. Tool height not at center line.	**3.** Adjust tool height to center line (**Page 41**).
	4. Too much play in gibs.	**4.** Tighten gibs (**Page 66**).
Tapered tool difficult to remove from tailstock quill.	**1.** Quill is not retracted all the way back into the tailstock.	**1.** Turn the quill handwheel until it forces taper out of quill.
	2. Contaminants not removed from taper before inserting into quill.	**2.** Clean the taper and bore and re-install tapered tool.
Cross slide, compound, or carriage feed has sloppy operation.	**1.** Gibs are out of adjustment.	**1.** Tighten gib screw(s). See (**Page 66**).
	2. Handwheel is loose or backlash is high.	**2.** Tighten handwheel fasteners, adjust handwheel backlash to a minimum.
	3. Lead screw mechanism worn or out of adjustment.	**3.** Adjust leadscrew to remove endplay (**Page 66**).
Cross slide, compound, or carriage feed handwheel is hard to move.	**1.** Dovetail slides loaded up with shavings, dust, or grime.	**1.** Remove gibs, clean ways/dovetails, lubricate, and readjust gibs.
	2. Gib screws are too tight.	**2.** Loosen gib screw(s) slightly, and lubricate bedways.
	3. Backlash setting too tight (cross slide only).	**3.** Slightly loosen backlash setting (**Page 66**).
	4. Bedways are dry.	**4.** Lubricate bedways and handles.
Cutting tool or machine components vibrate excessively during cutting.	**1.** Tool holder not tight enough.	**1.** Check for debris, clean, and retighten.
	2. Cutting tool sticks too far out of tool holder; lack of support.	**2.** Re-install cutting tool so no more than ⅓ of the total length is sticking out of tool holder.
	3. Gibs are out of adjustment.	**3.** Tighten gib screws at affected component.
	4. Dull cutting tool.	**4.** Replace or resharpen cutting tool.
	5. Incorrect spindle speed or feed rate.	**5.** Use the recommended spindle speed.

Symptom	Possible Cause	Possible Solution
Workpiece is tapered.	**1.** Headstock and tailstock are not properly aligned with each other.	**1.** Realign the tailstock to the headstock spindle bore centerline (**Page 34**).
Chuck jaws will not move or do not move easily.	**1.** Chips lodged in the jaws or scroll plate.	**1.** Remove jaws, clean and lubricate scroll plate, then replace jaws.
Carriage will not feed, or is hard to move.	**1.** Gears are not all engaged. **2.** Loose screw on the feed handle. **3.** Carriage lock is tightened down. **4.** Chips have loaded up on bedways. **5.** Bedways are dry and in need of lubrication. **6.** Carriage stop is interfering. **7.** Gibs are too tight. **8.** Gears or shear pin broken.	**1.** Adjust gear levers. **2.** Tighten. **3.** Check to make sure the carriage lock bolt is fully released. **4.** Frequently clean away chips that load up during turning operations. **5.** Lubricate bedways and handles. **6.** Check carriage stop position, and adjust it as necessary (**Page 42**). **7.** Loosen gib screw(s) slightly (**Page 66**). **8.** Replace gears or shear pin (**Page 71**).
Gear change levers will not shift into position.	**1.** Gears not aligned inside headstock.	**1.** Rotate spindle by hand with light pressure on the lever until gear falls into place.
Headstock oil does not flow or circulate properly.	**1.** (For first time operation only) the lathe is wired out-of-phase. **2.** Emergency stop push-button is engaged or at fault. **3.** Power supply is switched OFF at main power switch or breaker. **4.** Insufficient oil level in headstock oil tank or incorrect oil used in headstock oil tank. **5.** Suction screen clogged. **6.** Pinched/damaged oil line. **7.** Suction side of pump drawing air. **8.** Leak in distribution manifold located inside headstock. **9.** Pump motor at fault.	**1.** Correct out-of-phase wiring (refer to **Page 17** for details). **2.** Rotate button clockwise until it pops out to reset it for operation; replace if not working properly. **3.** Make sure main power switch and circuit breaker are turned ON. **4.** Add oil to the headstock oil tank (refer to **Headstock** "Checking & Adding Oil" on **Page 56** for details). Make sure to use the correct type of oil. **5.** Clean suction screen (see **Figure 111** on **Page 57**). **6.** Trace oil lines to inspect and replace pinched/damaged line. **7.** Locate leak and reseal/replace affected components. **8.** Locate leak and reseal/replace affected components. **9.** Replace/repair pump motor.

Warranty

This quality product is warranted by South Bend Lathe Company to the original buyer for one year from the date of purchase. This warranty does not apply to consumable parts, or defects due to any kind of misuse, abuse, negligence, accidents, repairs, alterations or lack of maintenance. We do not reimburse for third party repairs. In no event shall we be liable for death, injuries to persons or property, or for incidental, contingent, special or consequential damages arising from the use of our products.

We do not warrant or represent that this machine complies with the provisions of any law, act, code, regulation, or standard of any domestic or foreign government, industry, or authority. In no event shall South Bend's liability under this warranty exceed the original purchase price paid for this machine. Any legal actions brought against South Bend Lathe Company shall be tried in the State of Washington, County of Whatcom.

This is the sole written warranty for this machine. Any and all warranties that may be implied by law, including any merchantability or fitness, for any purpose, are hereby limited to the duration of this warranty. To take advantage of this warranty, contact us by mail or phone to give us the details of the problem you are having.

Thank you for your business and continued support.

South Bend Lathe Co.
P.O. Box 2027
Bellingham, WA 98227

PHONE: (360) 734-1540 (Administrative Offices)
FAX: (360) 676-1075 (International)
FAX: (360) 734-1639 (USA only)

southbendlathe.com

Printed In Taiwan

#BLTRCR12117

14" & 16" EVS TOOLROOM LATHES

MODELS SB1012/SB1014/SB1037 - 220V
MODELS SB1013/SB1015/SB1038 - 440V

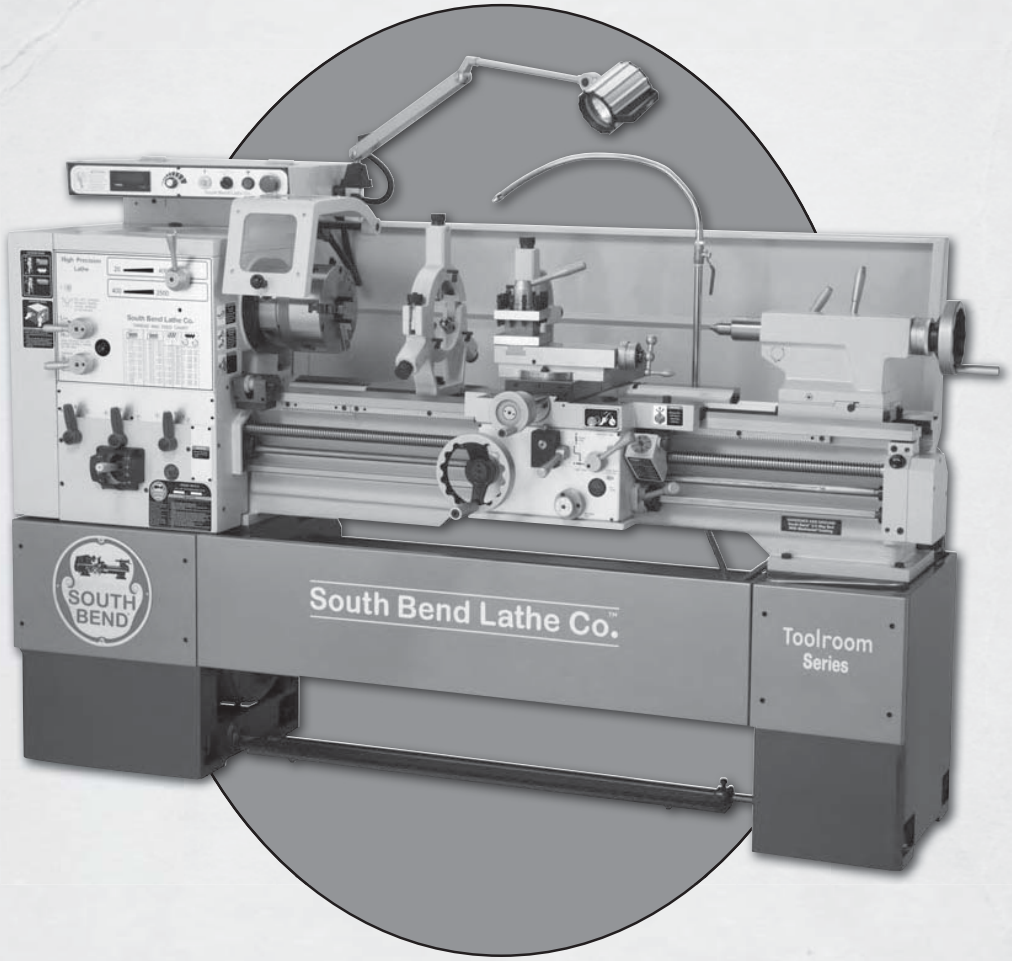

WIRING MANUAL

South Bend Lathe Co.™

Hundreds of Thousands of Lathes Sold With a Tradition of Quality Since 1906!

© November, 2009 by South Bend Lathe Co.

For Machines Mfg. Since 7/09

Scope of Manual

This manual assumes that the reader has a basic understanding of safe electrical practices and general wiring concepts, including how to safely make wire connections and avoid shorts. This manual is intended to be a reference source in the event that a repair or component replacement becomes necessary during the life of the machine. If an electrical repair becomes necessary, and you do not have experience working with electricity or performing wiring tasks, we strongly encourage you to get help from an experienced individual, such as an electrician, or from our technical support. Following this advice will help you avoid serious personal injury, maintain your warranty, and keep your machine operating correctly.

Manual Feedback

We've made every effort to be accurate when documenting this machine. However, errors sometimes happen or the machine design changes after the documentation process—so the manual may not exactly match your machine. If a difference between the manual and machine leaves you in doubt, contact our customer service (see bottom of page) for clarification.

We highly value customer feedback on our manuals. If you have a moment, please share your experience using this manual. What did you like about it? Is there anything you would change to make it better? Did it meet your expectations for clarity, professionalism, and ease-of-use?

South Bend Lathe, Inc.
c/o Technical Documentation Manager
P.O. Box 2027
Bellingham, WA 98227
Email: manuals@southbendlathe.com

Updates

For your convenience, any updates to this manual will be available to download free of charge through our website at:

www.southbendlathe.com

Customer Service

We stand behind our machines. If you have any service questions, parts requests or general questions about the machine, feel free to contact us.

South Bend Lathe Co.
P.O. Box 2027
Bellingham, WA 98227
Phone: (360) 734-1540
Parts Department: (417) 886-2954
Fax: (360) 676-1075 (International)
Fax: (360) 734-1639 (USA Only)
Email: cs@southbendlathe.com

Electrical Safety Instructions

These pages are accurate at the time of printing. In the constant effort to improve, however, we may make changes to the electrical systems of future machines. Study this section carefully. If you see differences between your machine and what is shown in this section, call Technical Support at (360) 734-1540 for assistance BEFORE making any changes to the wiring on your machine.

1. **Shock Hazard:** Working on wiring that is connected to a power source is extremely dangerous. Touching electrified parts will result in personal injury including but not limited to severe burns, electrocution, or death. Disconnect the power from the machine before servicing electrical components!

2. **Wire Connections:** All connections must be tight to prevent wires from loosening during machine operation. Double-check all wires disconnected or connected during any wiring task to ensure tight connections.

3. **Modifications:** Using aftermarket parts or modifying the wiring beyond what is shown in the diagram may lead to unpredictable results, including serious injury or fire.

4. **Motor Wiring:** The motor wiring shown in these diagrams is current at the time of printing, but it may not match your machine. Always use the wiring diagram inside the motor junction box.

5. **Circuit Requirements:** You MUST follow the requirements at the beginning of this manual when connecting your machine to a power source.

6. **Capacitors/Inverters:** Some capacitors and power inverters store an electrical charge for up to 10 minutes after being disconnected from the power source. To reduce the risk of being shocked, wait at least this long before working on capacitors.

7. **Wire/Component Damage:** Damaged wires or components increase the risk of serious personal injury, fire, or machine damage. If you notice that any wires or components are damaged while performing a wiring task, replace those wires or components before completing the task.

8. **Experiencing Difficulties:** If you are experiencing difficulties understanding the information included in this section, contact our Technical Support at (360) 734-1540.

WIRING DIAGRAM COLOR KEY

BLACK	Bk	BLUE WHITE	Bw	RED	Rd	PINK	Pk	WHITE	Wt
BLUE	Bl	GREEN	Gn	LIGHT BLUE	Lb	PURPLE	Pu	YELLOW GREEN	Yg
BROWN	Br	GRAY	Gy	ORANGE	Or	TUR-QUIOSE	Tu	YELLOW	Yl

NOTICE: **The photos and diagrams included in this section are best viewed in color. You can see them in color at www.southbendlathe.com.**

Wiring Overview

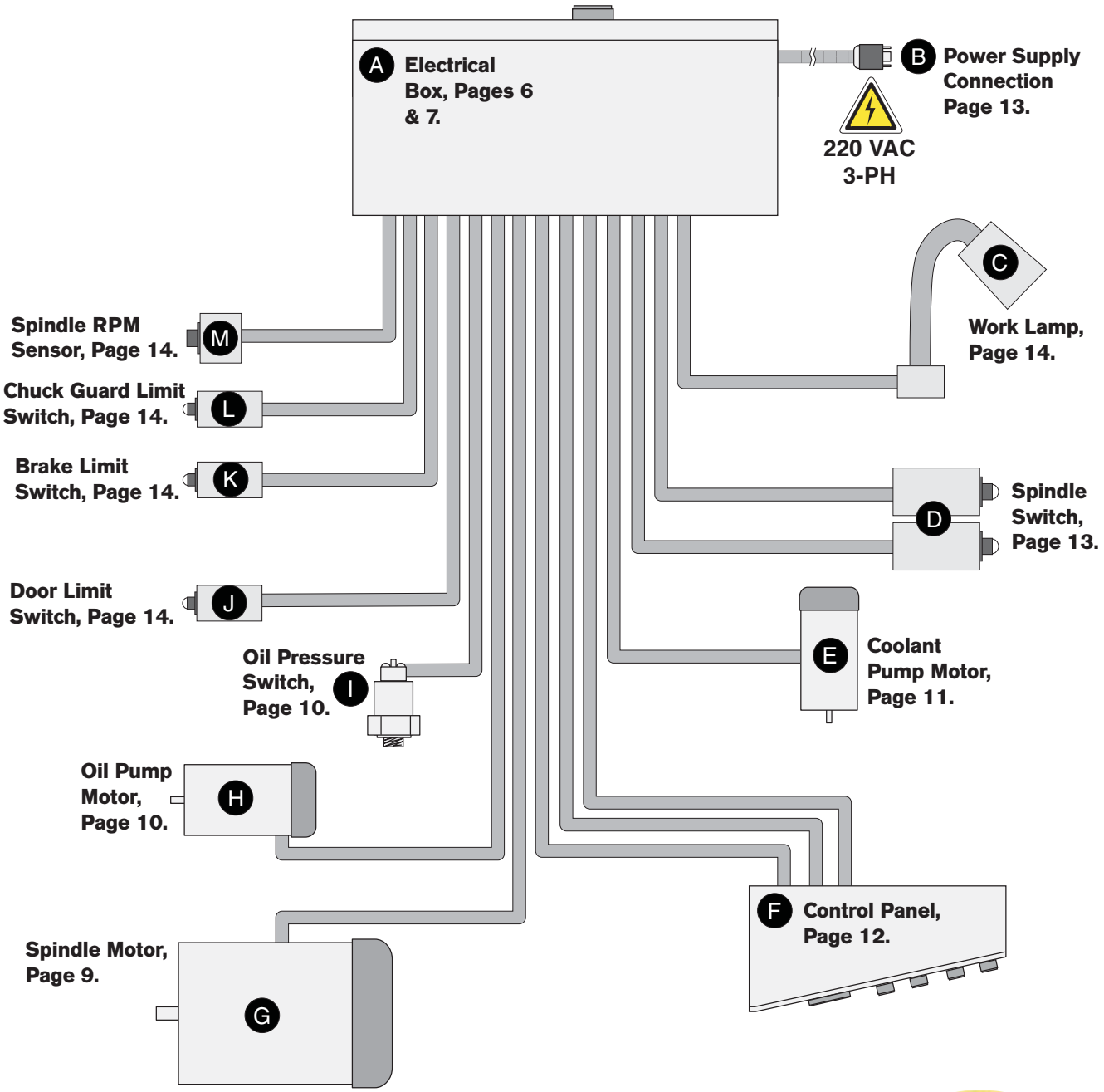

Component Location Index

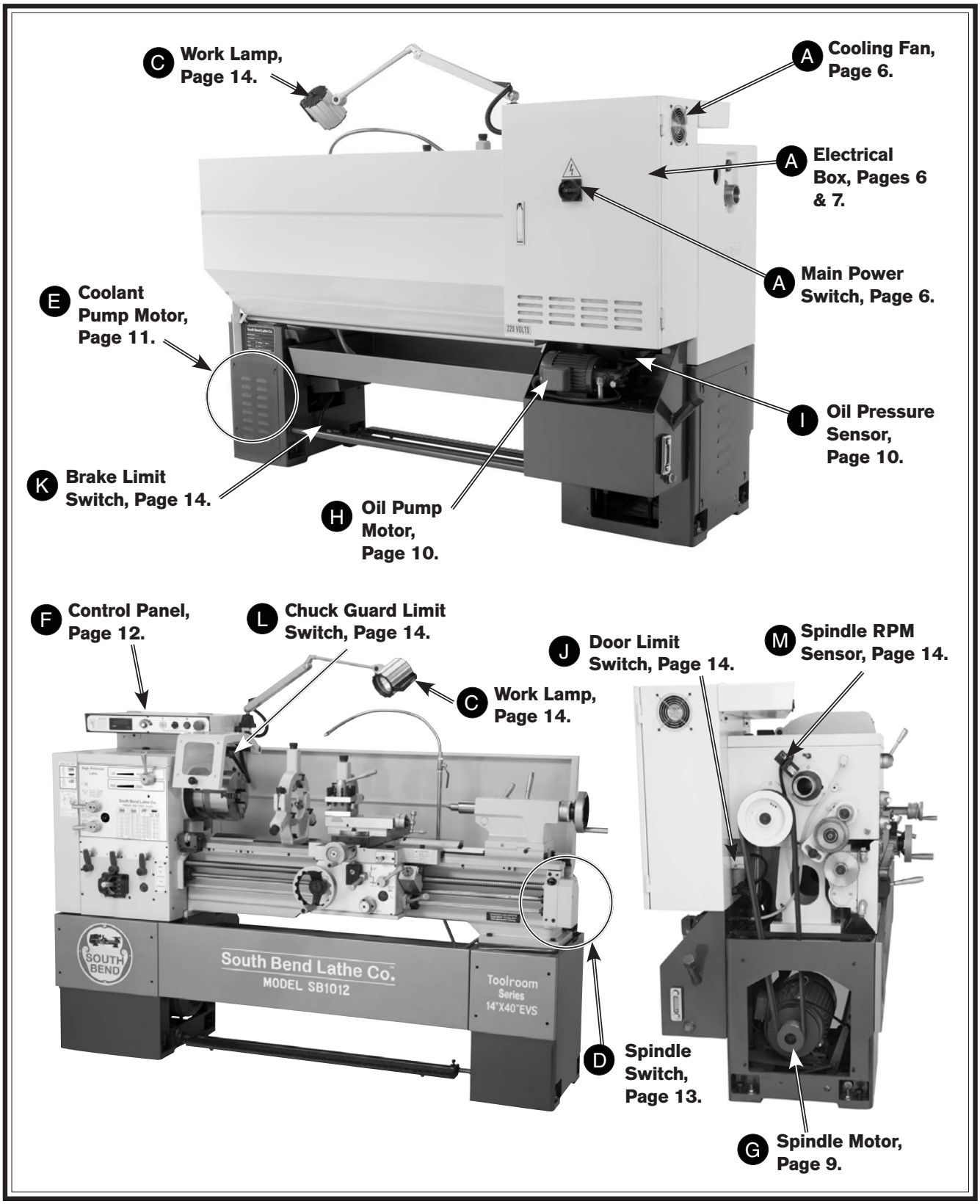

Figure 1. Component location index.

Electrical Box Wiring

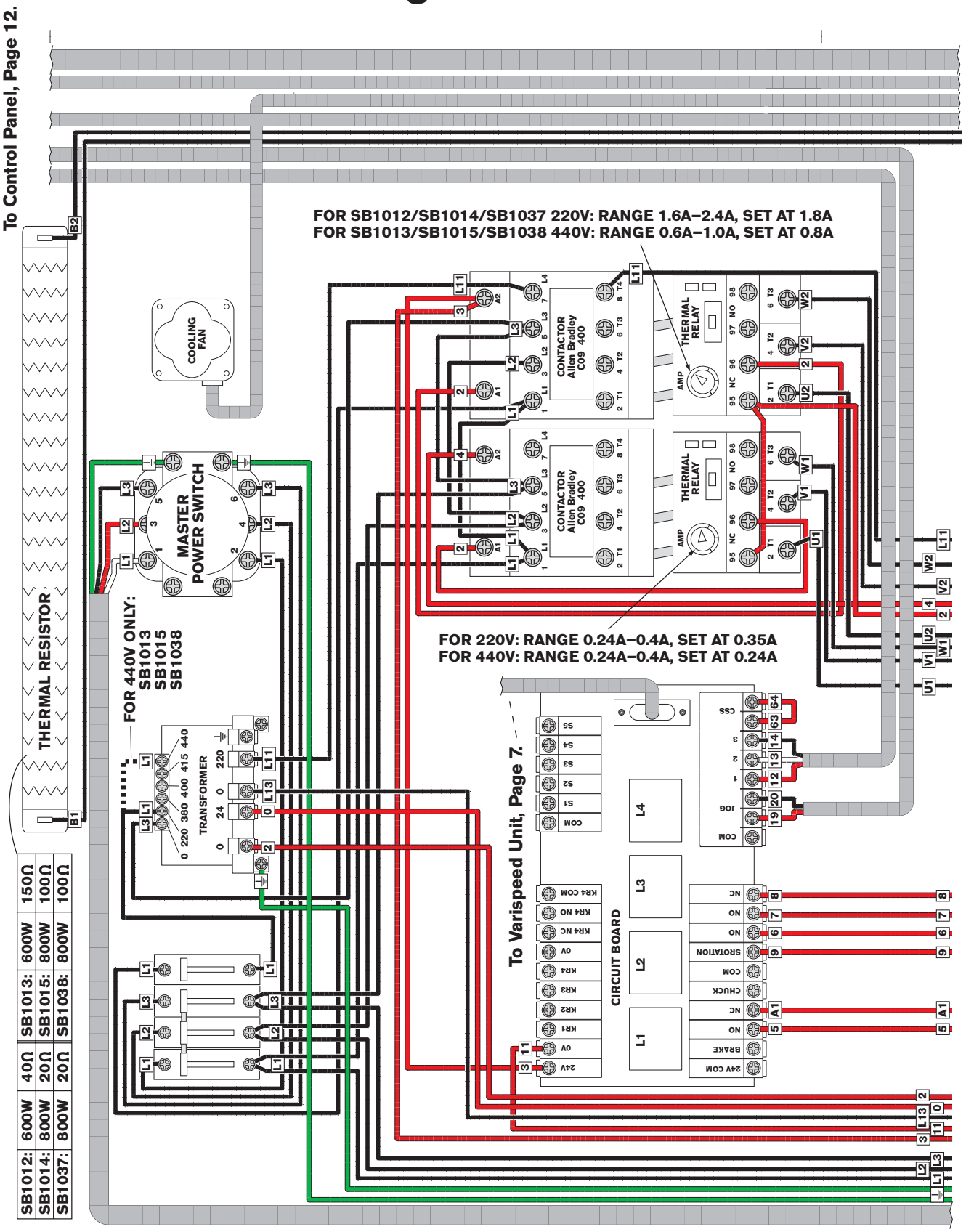

Electrical Box Wiring

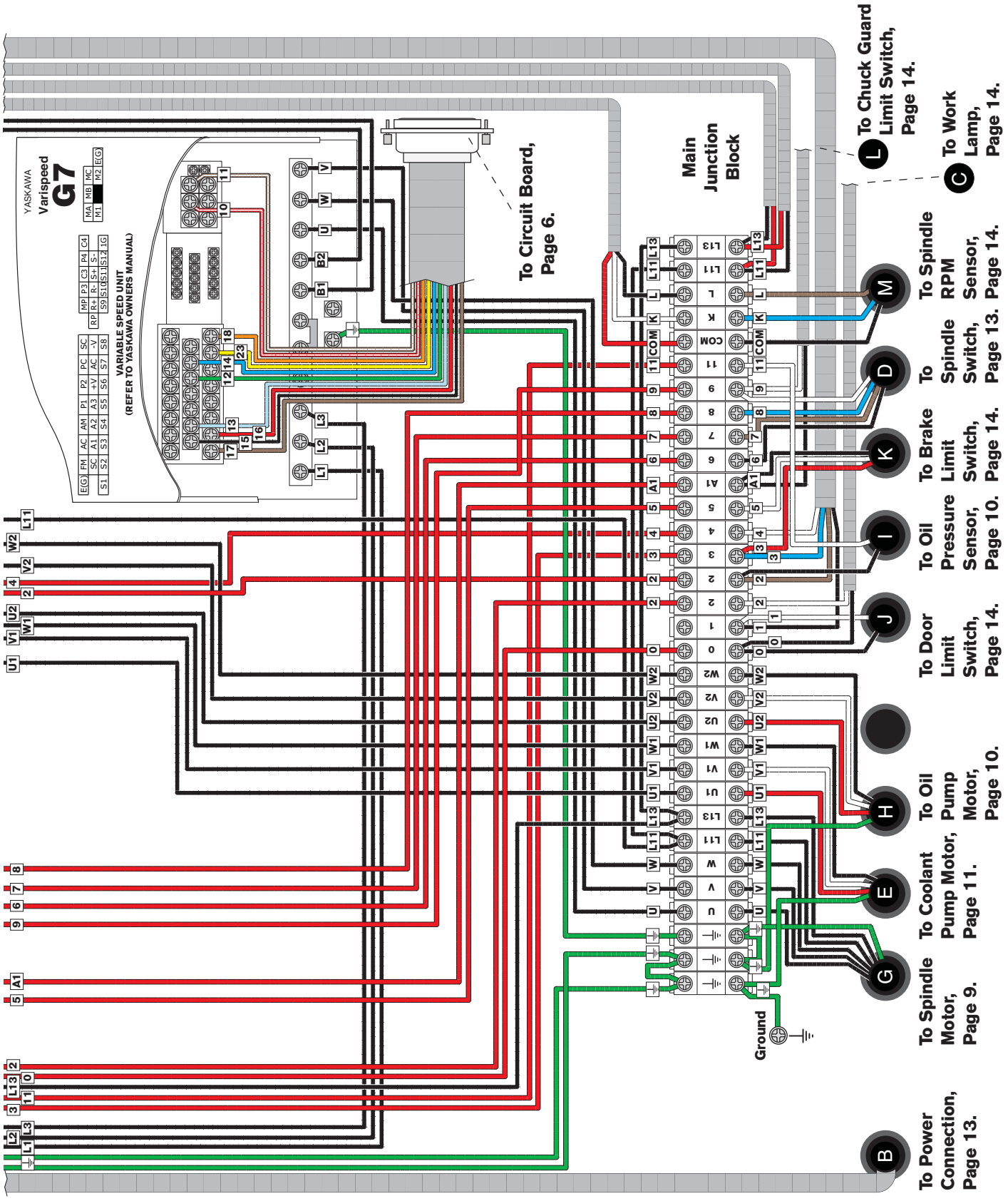

Electrical Box

Fig. 2. Electrical box.

220V Spindle Motor

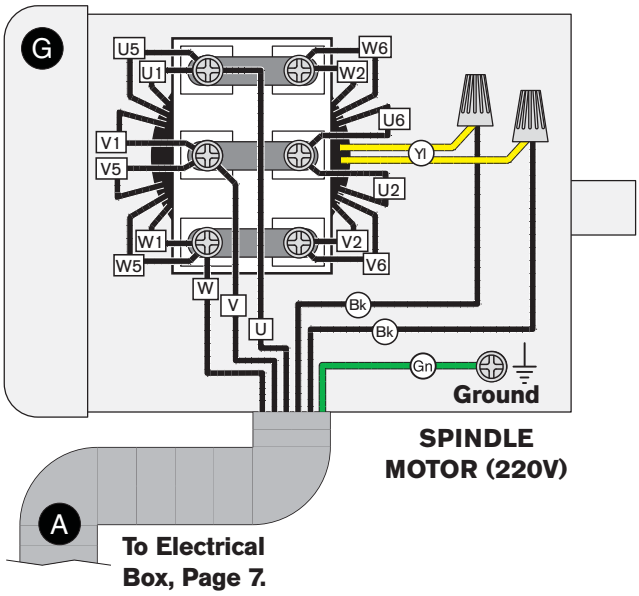

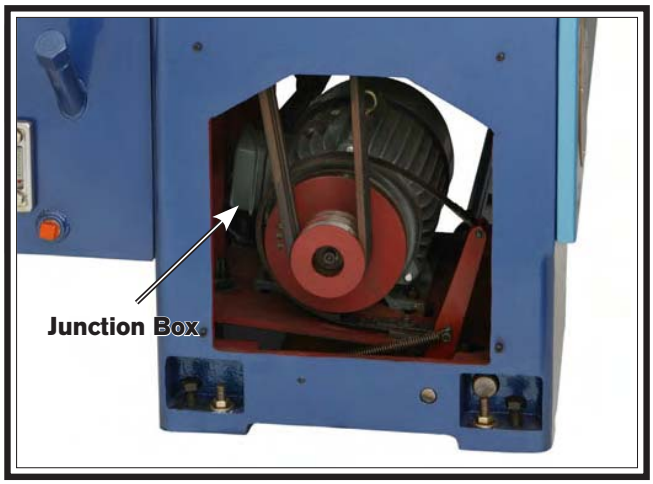

Figure. 3. Spindle motor location.

440V Spindle Motor

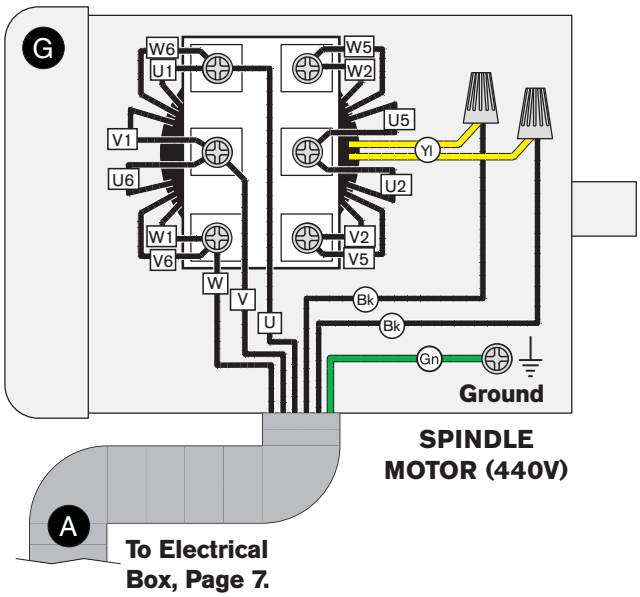

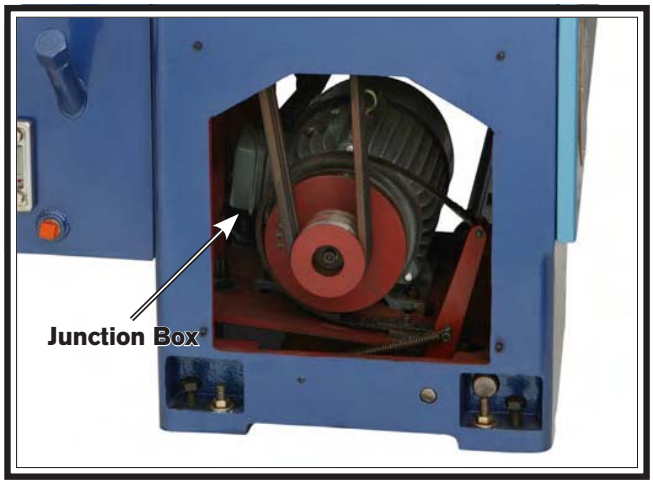

Figure. 4. Spindle motor location.

220V Oil Pump Motor & Pressure Sensor

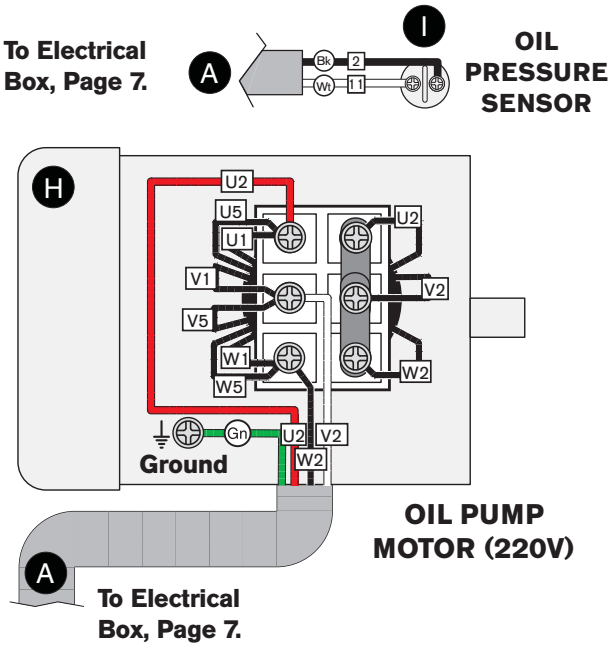

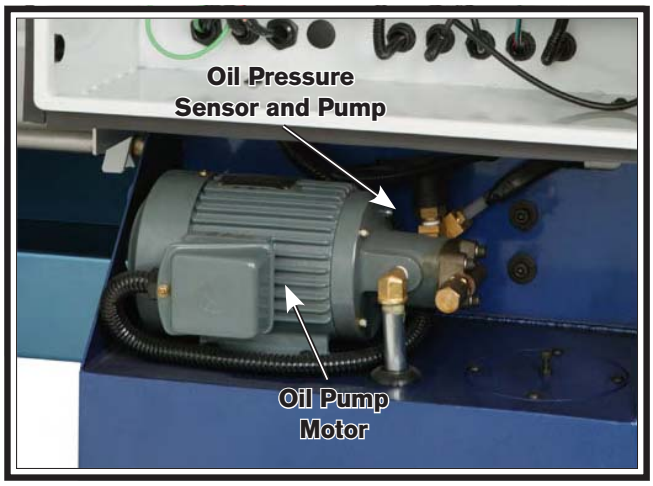

Figure. 5. Oil pump motor & pressure sensor location.

440V Oil Pump Motor & Pressure Sensor

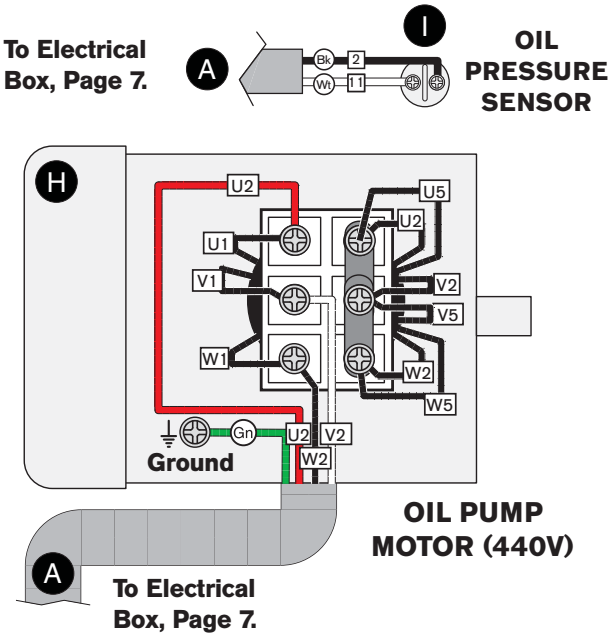

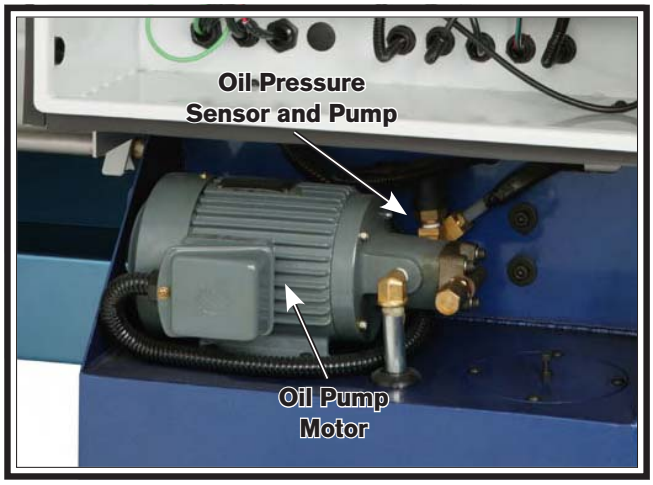

Figure. 6. Oil pump motor & pressure sensor location.

220V Coolant Pump Wiring

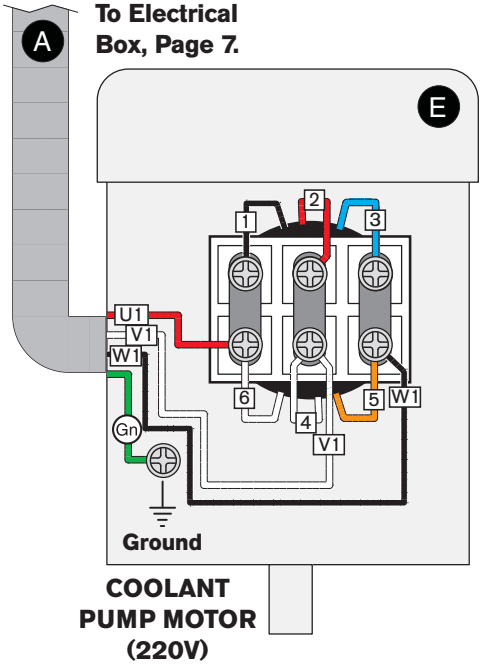

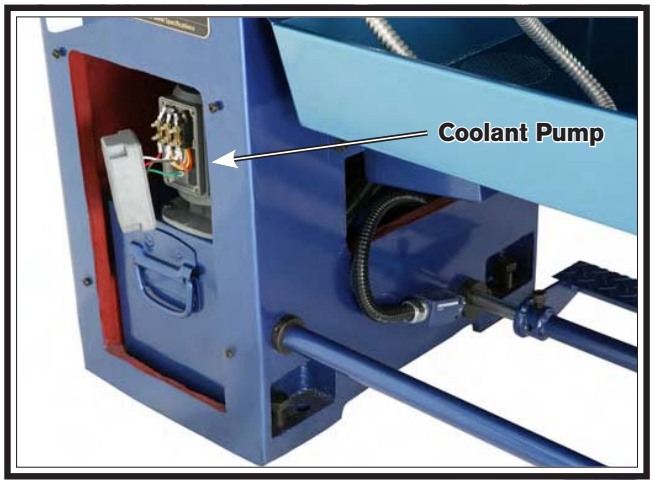

Figure. 7. Coolant pump location.

440V Coolant Pump Wiring

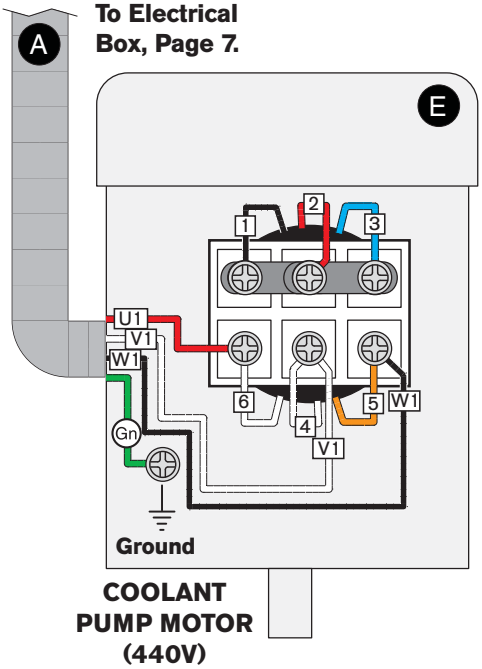

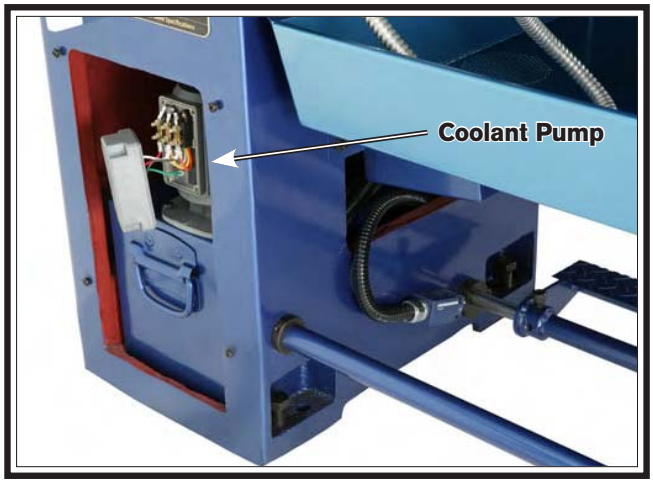

Figure. 8. Coolant pump location.

Control Panel Wiring

Fig. 9. Control panel location.

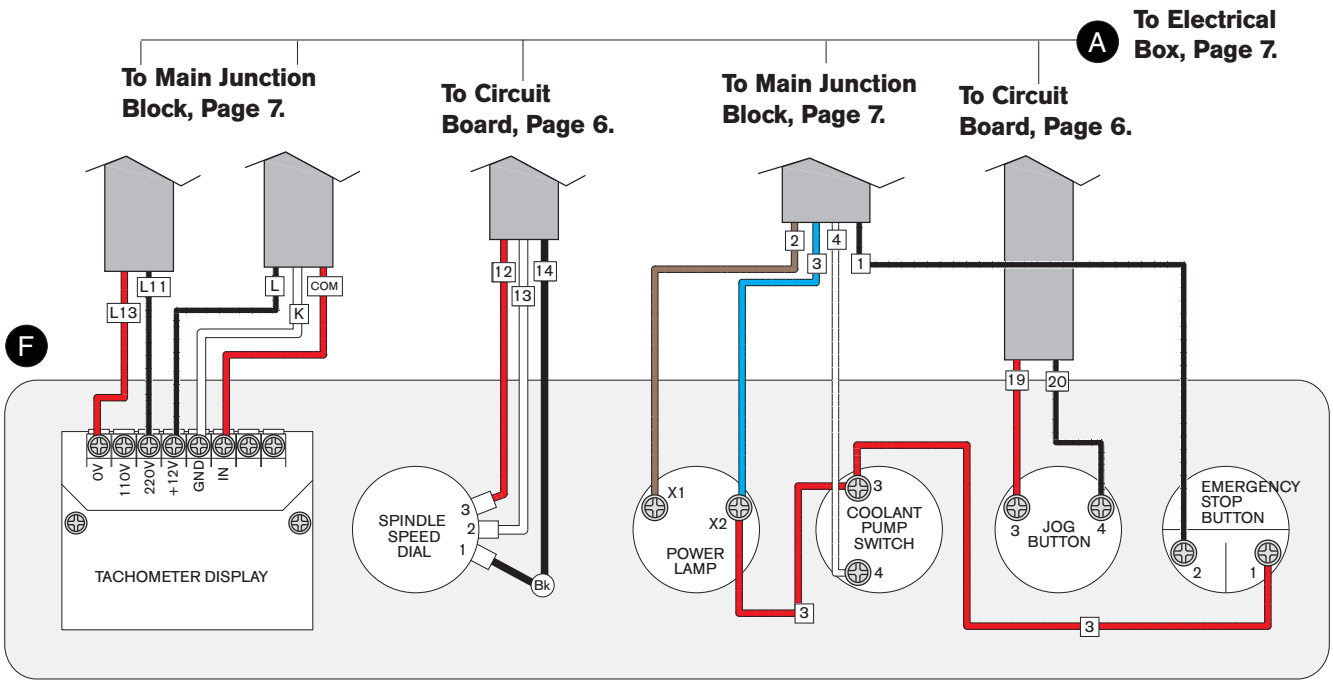

Control Panel Switches, Figure 9.

Spindle Rotation Switch

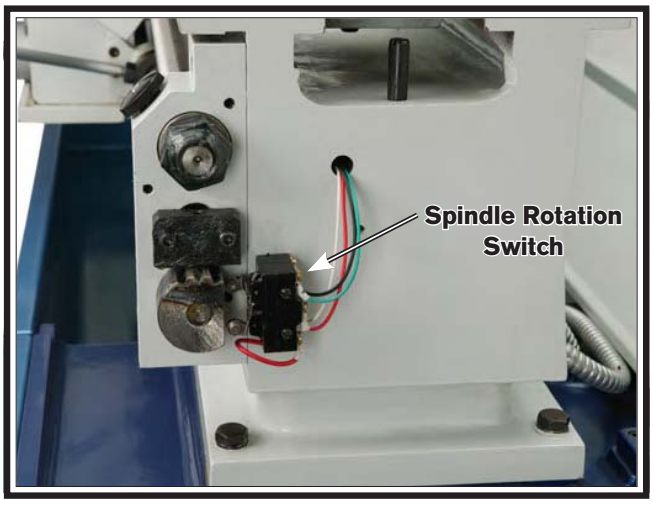

Fig. 10. Spindle rotation switch location.

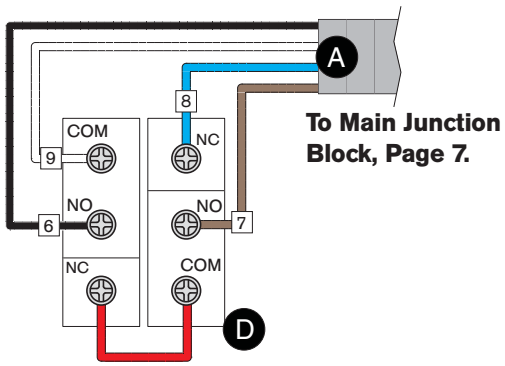

Spindle Rotation Switch,
Figure 10.

220V Power Connection

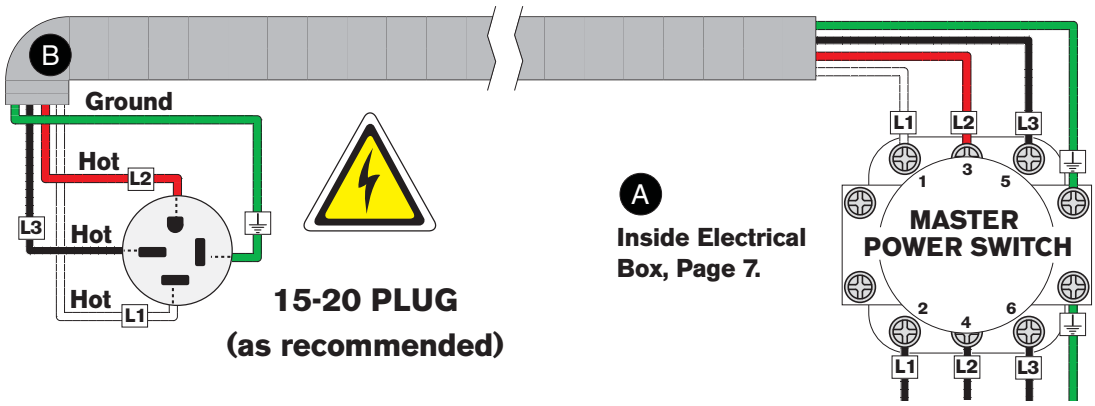

440V Power Connection

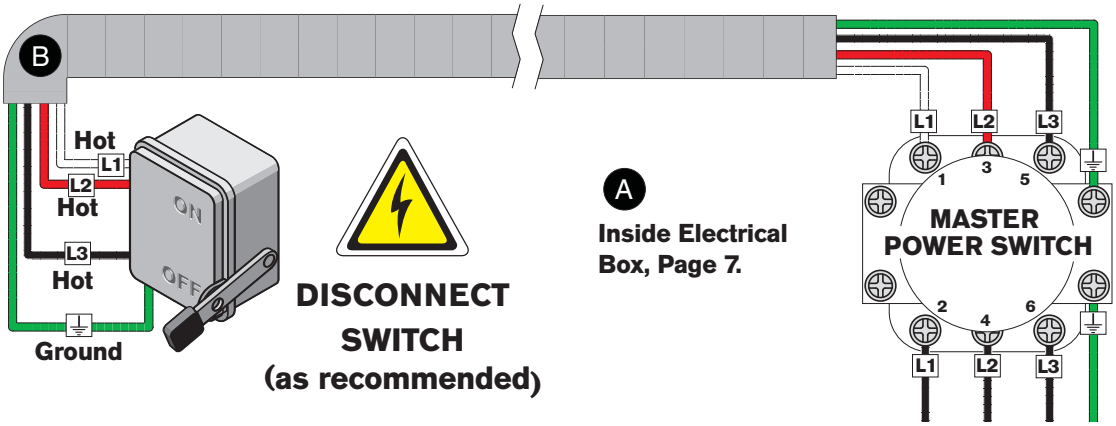

Additional Component Wiring

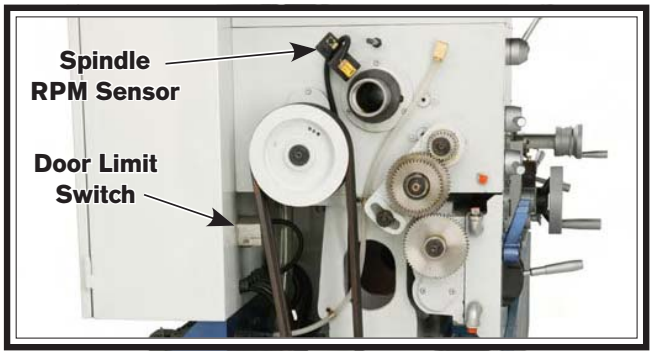

Fig. 11. RPM sensor and door limit switch location.

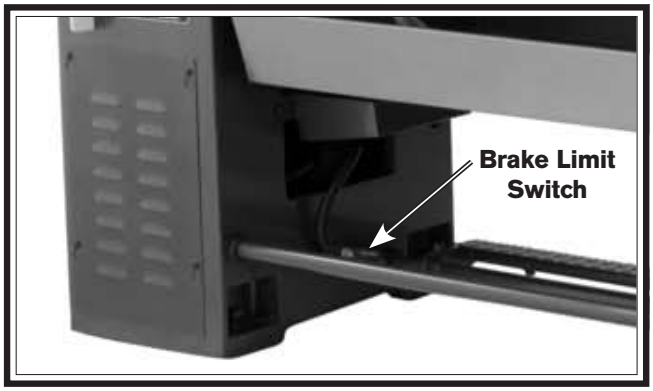

Fig. 12. Brake limit switch location.

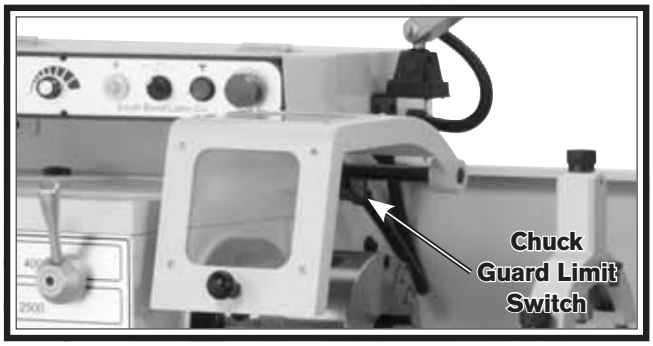

Fig. 13. Chuck guard limit switch.

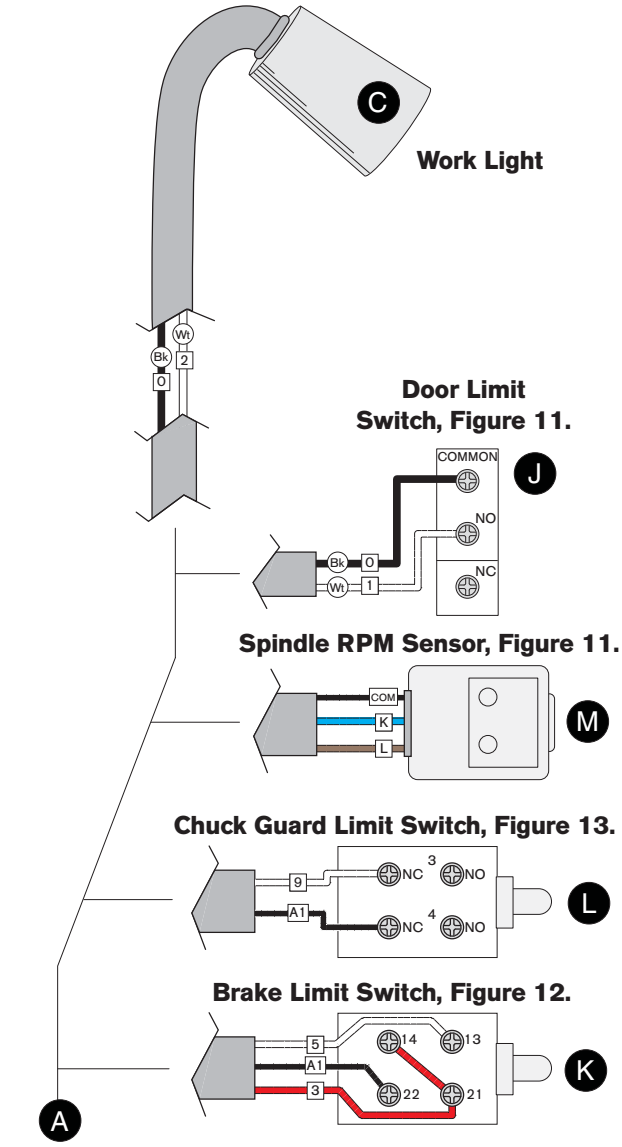

To Electrical
Box, Page 7.

Warranty

This quality product is warranted by South Bend Lathe Company to the original buyer for one year from the date of purchase. This warranty does not apply to consumable parts, or defects due to any kind of misuse, abuse, negligence, accidents, repairs, alterations or lack of maintenance. We do not reimburse for third party repairs. In no event shall we be liable for death, injuries to persons or property, or for incidental, contingent, special or consequential damages arising from the use of our products.

We do not warrant or represent that this machine complies with the provisions of any law, act, code, regulation, or standard of any domestic or foreign government, industry, or authority. In no event shall South Bend's liability under this warranty exceed the original purchase price paid for this machine. Any legal actions brought against South Bend Lathe Company shall be tried in the State of Washington, County of Whatcom.

This is the sole written warranty for this machine. Any and all warranties that may be implied by law, including any merchantability or fitness, for any purpose, are hereby limited to the duration of this warranty. To take advantage of this warranty, contact us by mail or phone to give us the details of the problem you are having.

Thank you for your business and continued support.

South Bend Lathe Co.
P.O. Box 2027
Bellingham, WA 98227

PHONE: (360) 734-1540 (Administrative Offices)
FAX: (360) 676-1075 (International)
FAX: (360) 734-1639 (USA only)

southbendlathe.com

Printed In Taiwan **#JB12236**

14" X 40" EVS TOOLROOM LATHES

MODEL SB1012 - 220V
MODEL SB1013 - 440V

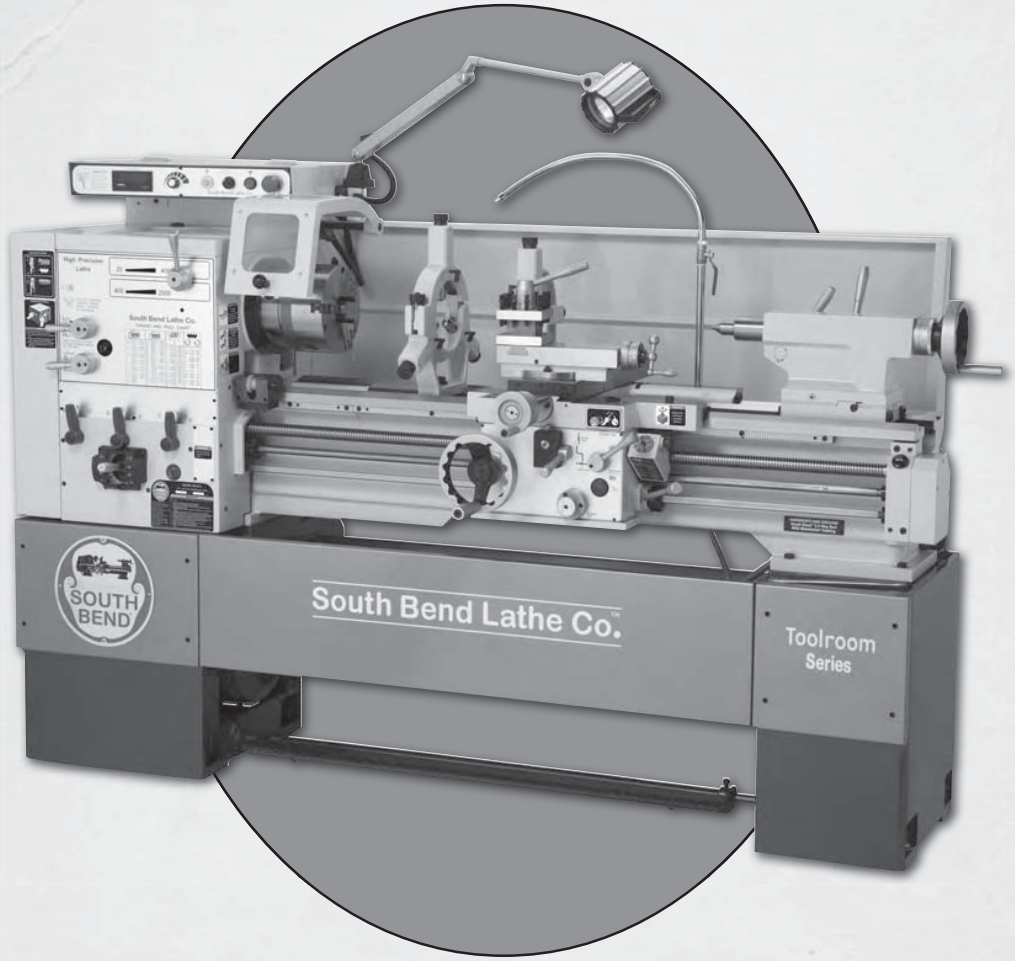

PARTS MANUAL

South Bend Lathe Co.™

Hundreds of Thousands of Lathes Sold With a Tradition of Quality Since 1906!

© November, 2009 by South Bend Lathe Co., Revised February, 2010 (TS)

For Machines Mfg. Since 7/09

Scope of Manual

The parts breakdowns in this manual are provided to facilitate the service and repair of this machine as follows: (1) By helping the mechanic understand how and where individual parts fit together; and (2) by establishing a numbering system from which available replacement parts can be ordered. Please note that not all parts shown are available for purchase and some individual parts may only be available in assemblies with other parts. In the case of fasteners or other off-the-shelf hardware, we will happily provide customers with replacements, but for the sake of expediency, these can also be found at your local hardware or industrial supply store.

Manual Feedback

We've made every effort to be accurate when documenting this machine. However, errors sometimes happen or the machine design changes after the documentation process—so the manual may not exactly match your machine. If a difference between the manual and machine leaves you in doubt, contact our customer service for clarification.

We highly value customer feedback on our manuals. If you have a moment, please share your experience using this manual. What did you like about it? Is there anything you would change to make it better? Did it meet your expectations for clarity, professionalism, and ease-of-use?

South Bend Lathe, Inc.
c/o Technical Documentation Manager
P.O. Box 2027
Bellingham, WA 98227
Email: manuals@southbendlathe.com

Updates

For your convenience, any updates to this manual will be available to download free of charge through our website at:

www.southbendlathe.com

Customer Service

We stand behind our machines. If you have any service questions, parts requests or general questions about the machine, feel free to contact us.

South Bend Lathe Co.
P.O. Box 2027
Bellingham, WA 98227
Phone: (360) 734-1540
Parts Department: (417) 886-2954
Fax: (360) 676-1075 (International)
Fax: (360) 734-1639 (USA Only)
Email: cs@southbendlathe.com

Table of Contents

Headstock Casing 2
Headstock Controls 3
Headstock Upper Gearing 5
Headstock Transfer Gearing 7
Gearbox Gearing 8
Gearbox Controls 10
Apron - Front View 12
Apron - Rear View 14
Dial Indicator 16
Carriage Stop 16
Compound Slide & Tool Post 17
Saddle Body & Controls 18
Saddle Base 20
Bed & Shafts 21
End Gears 23
Motor Assembly 24
Cabinets & Panels 26
Headstock Oiling System 28
Tailstock 30
Steady Rest 32
Follow Rest 32
Electrical Cabinet & Control Panel 33
Accessories 35
Machine Labels (Front View) 36
Machine Labels (Rear View) 37

Headstock Casing

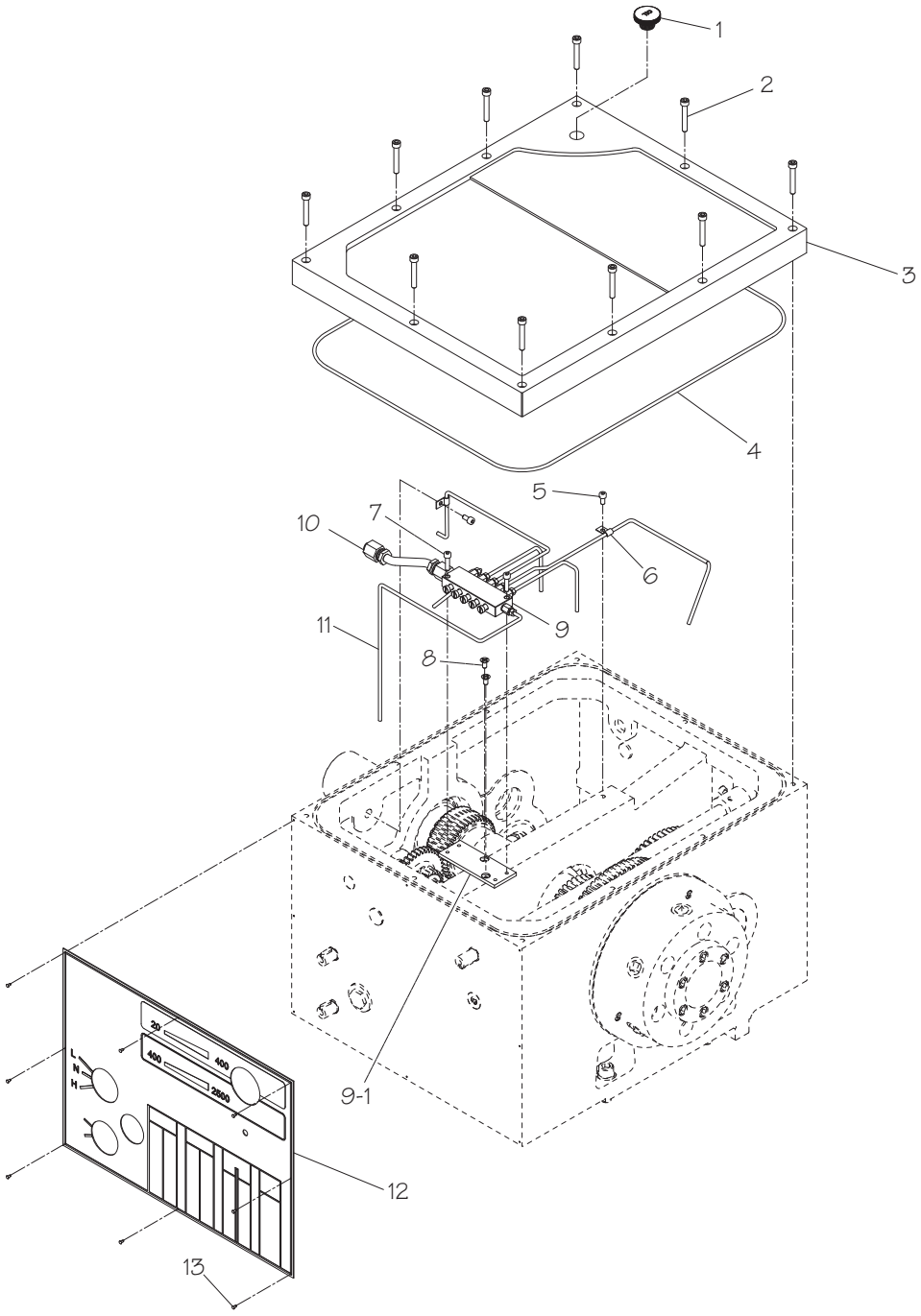

REF	PART #	DESCRIPTION
1	PSB10120001	OIL FILL PLUG
2	PCAP29M	CAP SCREW M6-1 X 40
3	PSB10120003	HEADSTOCK COVER
4	PSB10120004	COVER OIL SEAL M4 X 1700
5	PCAP50M	CAP SCREW M5-.8 X 10
6	PSB10120006	PIPE CLIP 5MM
7	PCAP15M	CAP SCREW M5-.8 X 20

REF	PART #	DESCRIPTION
8	PFH30M	FLAT HD SCR M5-.8 X 8
9	PSB10120009	OIL DISTRIBUTOR A-5S
9-1	PSB10120009-1	OIL DISTRIBUTOR BRACKET
10	PSB10120010	PIPE JOINT
11	PSB10120011	NYLON TUBE
12	PSB10120012	HEADSTOCK CONTROL PLATE
13	PRIV001M	STEEL FLUTED RIVET 2 X 5MM

Headstock Controls

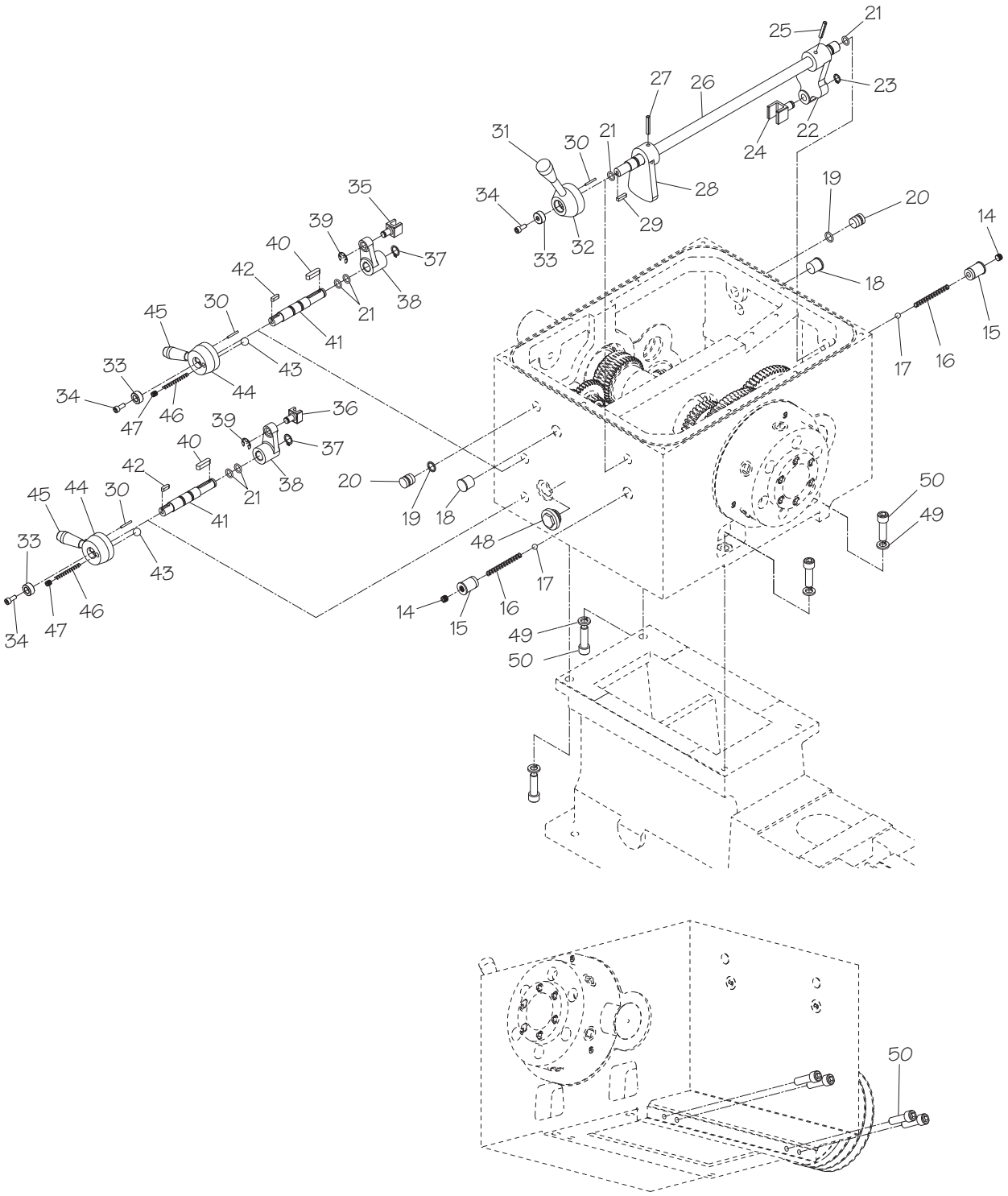

Headstock Controls Parts List

REF	PART #	DESCRIPTION
14	PSS30M	SET SCREW M10-1.5 X 10
15	PSB10120015	THREADED PLUG M10-1.5
16	PSB10120016	COMPRESSION SPRING M8 X 37
17	PSTB001M	STEEL BALL 8.5MM
18	PSB10120018	HEADSTOCK CASTING PLUG 20MM
19	PORP014	O-RING 13.8 X 2.4 P14
20	PSB10120020	HEADSTOCK CASTING PLUG 18MM
21	PORP021	O-RING 20.8 X 2.4 P21
22	PSB10120022	SHIFT CAM
23	PR03M	EXT RETAINING RING 12MM
24	PSB10120024	SHIFT FORK
25	PRP31M	ROLL PIN 6 X 36
26	PSB10120026	SHIFT ROD
27	PRP32M	ROLL PIN 6 X 40
28	PSB10120028	SHIFT CAM
29	PK01M	KEY 5 X 5 X 22
30	PRP16M	ROLL PIN 3 X 25
31	PSB10120031	LONG SHIFT HANDLE
32	PSB10120032	SHIFT HANDLE HUB

REF	PART #	DESCRIPTION
33	PSB10120033	HANDLE WASHER 6MM
34	PCAP01M	CAP SCREW M6-1 X 16
35	PSB10120035	SHIFT FORK
36	PSB10120036	SHIFT FORK
37	PR05M	EXT RETAINING RING 15MM
38	PSB10120038	SHIFT CAM
39	PEC015M	E-CLIP 8MM
40	PK12M	KEY 5 X 5 X 30
41	PSB10120041	SHIFT ROD
42	PK164M	KEY 5 X 5 X 17
43	PSTB001	STEEL BALL 1/4
44	PSB10120044	SHIFT HANDLE HUB
45	PSB10120045	SHORT SHIFT HANDLE
46	PSB10120046	COMPRESSION SPRING 6 X 27
47	PSS20M	SET SCREW M8-1.25 X 8
48	PSB10120048	OIL SIGHT GLASS
49	PLW05M	LOCK WASHER 12MM
50	PCAP92M	CAP SCREW M12-1.75 X 40

Headstock Upper Gearing

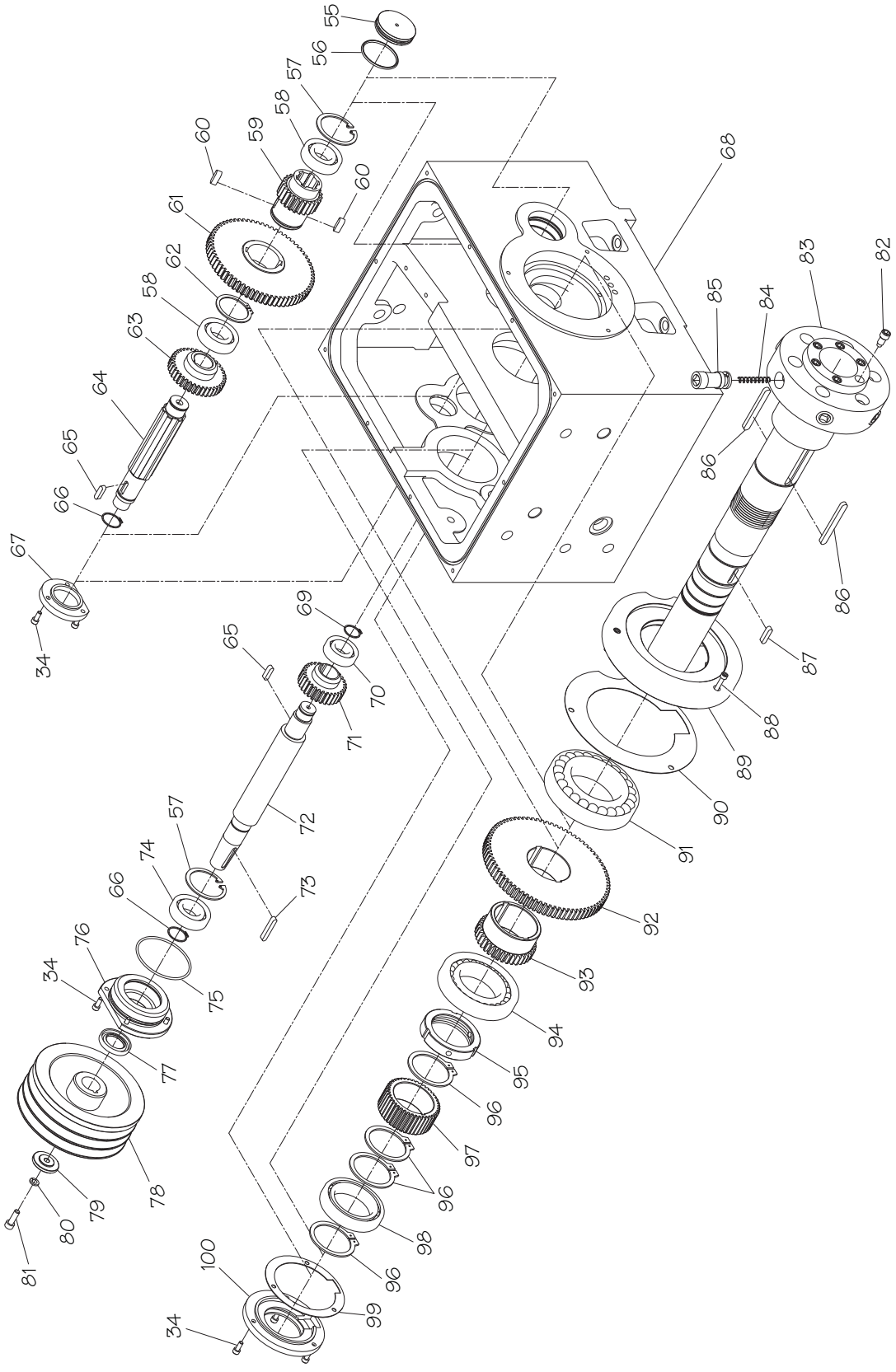

Headstock Upper Gearing Parts List

REF	PART #	DESCRIPTION
34	PCAP01M	CAP SCREW M6-1 X 16
55	PSB10120055	INBOARD DRIVE SHAFT END CAP
56	P0RG050	O-RING 54.4 X 3.1 G50
57	PR38M	INT RETAINING RING 62MM
58	P6206-0PEN	BALL BEARING 6206-0PEN
59	PSB10120059	GEAR 24T
60	PK161M	KEY 10 X 8 X 25
61	PSB10120061	GEAR 67T
62	PR76M	EXT RETAINING RING 52MM
63	PSB10120063	GEAR 38T
64	PSB10120064	DRIVE SHAFT
65	PK27M	KEY 7 X 7 X 25
66	PR15M	EXT RETAINING RING 30MM
67	PSB10120067	OUTBOARD DRIVE SHAFT END CAP
68	PSB10120068	HEADSTOCK CASTING
69	PR11M	EXT RETAINING RING 25MM
70	P6205-0PEN	BALL BEARING 6205-0PEN
71	PSB10120071	GEAR 30T
72	PSB10120072	INPUT SHAFT
73	PK62M	KEY 7 X 7 X 45
74	P6206RS	BALL BEARING 6206RS
75	P0RG085	O-RING 84.4 X 3.1 G85
76	PSB10120076	FLANGED BEARING END CAP
77	PSB10120077	OIL SEAL

REF	PART #	DESCRIPTION
78	PSB10120078	SPINDLE PULLEY
79	PSB10120079	PULLEY WASHER 8MM
80	PLW04M	LOCK WASHER 8MM
81	PCAP31M	CAP SCREW M8-1.25 X 25
82	PSB10120082	SPINDLE BOLT
83	PSB10120083	SPINDLE
84	PSB10120084	CAM LOCK SPRING
85	PSB10120085	CAM LOCK
86	PK162M	KEY 10 X 6 X 85
87	PK28M	KEY 7 X 7 X 30
88	PCAP48M	CAP SCREW M6-1 X 35
89	PSB10120089	FRONT SPINDLE BEARING COVER
90	PSB10120090	BEARING COVER GASKET
91	PSB10120091	TAPERED ROLLER BEARING 32019 NTN
92	PSB10120092	GEAR 79T
93	PSB10120093	GEAR 36T
94	PSB10120094	TAPERED ROLLER BEARING 30214A NTN
95	PSB10120095	SPANNER NUT
96	PR13M	EXT RETAINING RING 65MM
97	PSB10120097	GEAR 42T
98	P6013	BALL BEARING 6013-0PEN
99	PSB10120099	END CAP GASKET
100	PSB10120100	OUTBOARD SPINDLE END CAP

Headstock Transfer Gearing

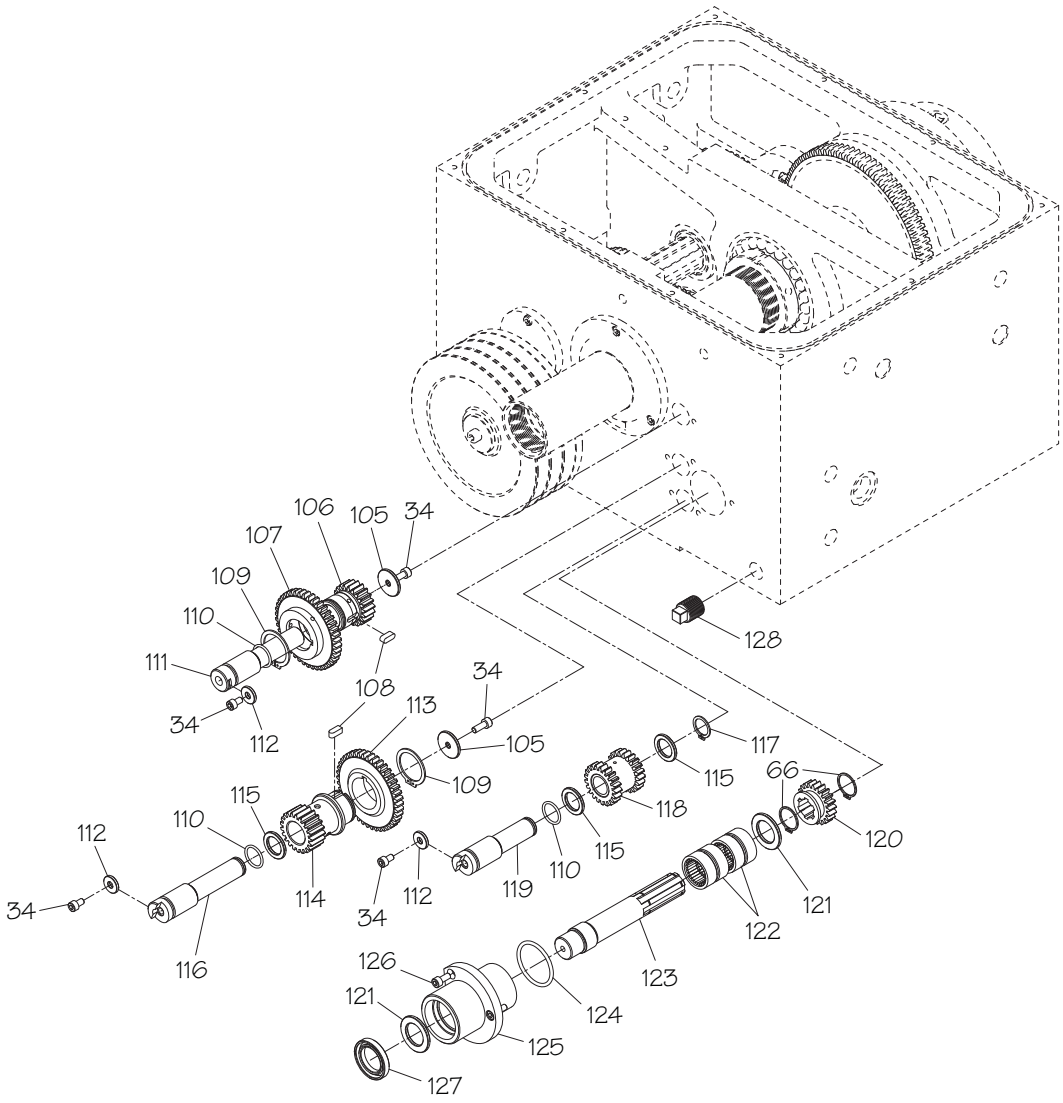

REF	PART #	DESCRIPTION
34	PCAP01M	CAP SCREW M6-1 X 16
66	PR15M	EXT RETAINING RING 30MM
105	PSB10120105	GEAR FENDER WASHER 6MM
106	PSB10120106	GEAR 21T
107	PSB10120107	GEAR 42T
108	PK99M	KEY 6 X 6 X 15
109	PR12M	EXT RETAINING RING 35MM
110	PORP021	O-RING 20.8 X 2.4 P21
111	PSB10120111	GEAR SHAFT
112	PSB10120112	GEAR SHAFT WASHER 6MM
113	PSB10120113	GEAR 42T
114	PSB10120114	GEAR SLEEVE 21T
115	PSB10120115	O-RING SPACER

REF	PART #	DESCRIPTION
116	PSB10120116	GEAR SHAFT
117	PR09M	EXT RETAINING RING 20MM
118	PSB10120118	DOUBLED ENDED GEAR 12T/21T
119	PSB10120119	GEAR SHAFT
120	PSB10120120	GEAR 21T
121	PSB10120121	SPLINE SHAFT SPACER
122	PSB10120122	NEEDLE BEARING RNA-6904
123	PSB10120123	SPLINE SHAFT
124	PORP044	O-RING 43.7 X 3.5 P44
125	PSB10120125	FLANGED BEARING END CAP
126	PCAP26M	CAP SCREW M6-1 X 12
127	PSB10120127	OIL SEAL 28 X 44 X 7
128	PSB10120128	SQUARE HEAD DRAIN PLUG 1/2 PT

Gearbox Gearing

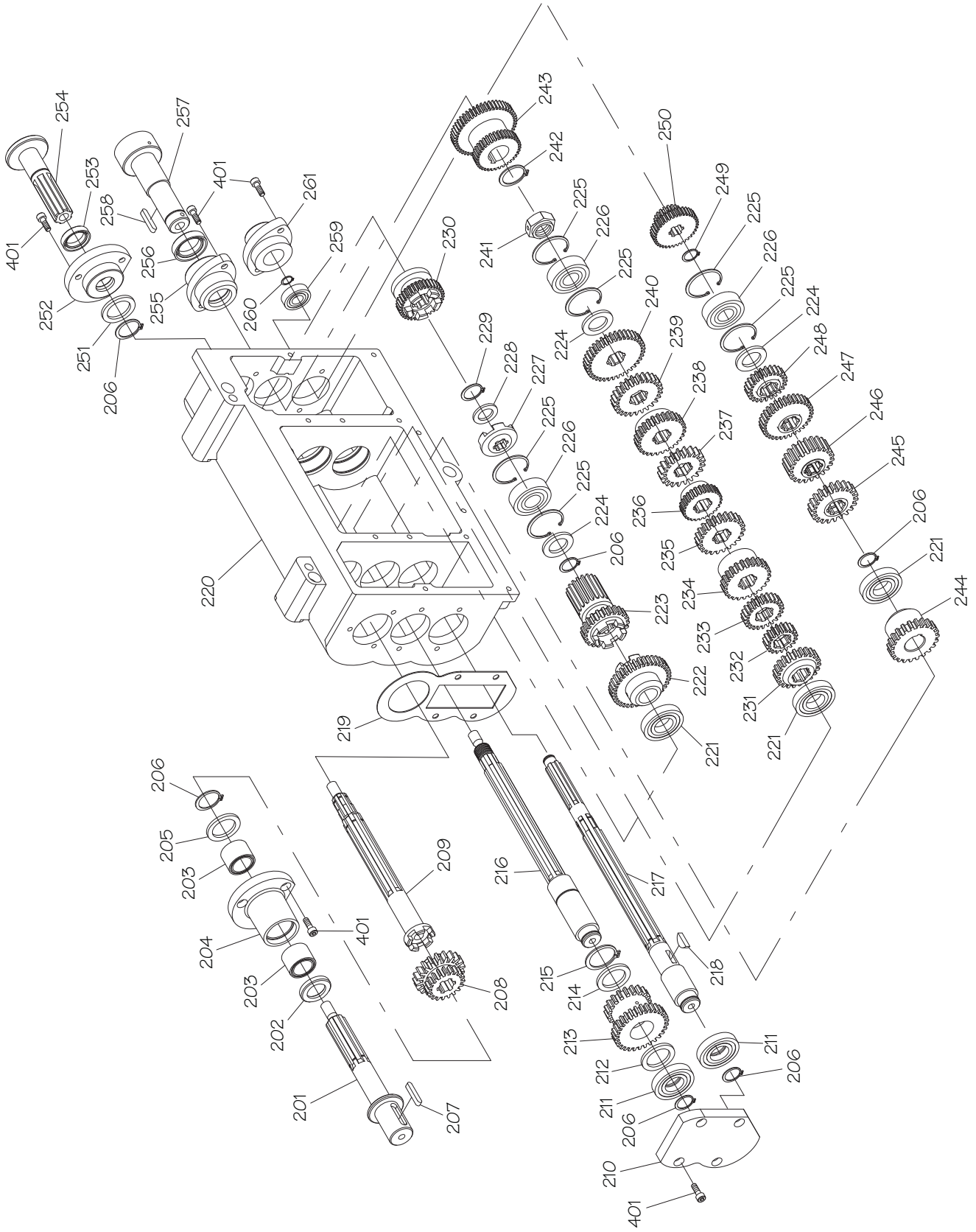

Gearbox Gearing Parts List

REF	PART #	DESCRIPTION
201	PSB10120201	SPLINE SHAFT
202	PSB10120202	OIL SEAL 20 X 32 X 5
203	PSB10120203	SLEEVE BEARING TAF202820
204	PSB10120204	SLEEVE BEARING HOUSING
205	PSB10120205	SLEEVE BEARING SPACER
206	PR09M	EXT RETAINING RING 20MM
207	PK109M	KEY 7 X 7 X 35
208	PSB10120208	DOUBLE GEAR 19/20T
209	PSB10120209	SPLINE SHAFT
210	PSB10120210	SPLINE SHAFT END CAP
211	PSB10120211	BALL BEARING 16004
212	PSB10120212	BEARING SPACER
213	PSB10120213	DOUBLE-ENDED GEAR 19T/30T
214	PSB10120214	GEAR SPACER
215	PR11M	EXT RETAINING RING 25MM
216	PSB10120216	SPLINE SHAFT
217	PSB10120217	SPLINE SHAFT
218	PSB10120218	WOODRUFF KEY 5 X 19
219	PSB10120219	END CAP GASKET
220	PSB10120220	GEARBOX CASTING
221	PSB10120211	BALL BEARING 16004
222	PSB10120222	CLUTCH GEAR 38T
223	PSB10120223	DOUBLE ENDED CLUTCH GEAR 23T/19T
224	PSB10120224	SPACER
225	PR23M	INT RETAINING RING 40MM
226	P6203-OPEN	BALL BEARING 6203-OPEN
227	PSB10120227	CLUTCH RING
228	PSB10120228	CLUTCH SPACER
229	PR06M	EXT RETAINING RING 16MM
230	PSB10120230	CLUTCH GEAR 35T
231	PSB10120231	GEAR 22T
232	PSB10120232	GEAR 19T
233	PSB10120233	GEAR 20T
234	PSB10120234	GEAR 24T
235	PSB10120235	GEAR 23T
236	PSB10120236	GEAR 27T
237	PSB10120237	GEAR 24T
238	PSB10120238	GEAR 28T
239	PSB10120239	GEAR 26T
240	PSB10120240	GEAR 38T
241	PSB10120241	GEAR RETAINING NUT
242	PR10M	EXT RETAINING RING 22MM
243	PSB10120243	DOUBLE ENDED GEAR 36T/50T
244	PSB10120244	GEAR 22T
245	PSB10120245	GEAR 22T
246	PSB10120246	GEAR 22T
247	PSB10120247	GEAR 33T
248	PSB10120248	GEAR 22T
249	PR18M	EXT RETAINING RING 17MM
250	PSB10120250	DOUBLE GEAR 20T/36T
251	PSB10120251	END CAP SPACER
252	PSB10120252	SPLINE SHAFT END CAP
253	PSB10120202	OIL SEAL 20 X 32 X 5
254	PSB10120254	SPLINE SHAFT
255	PSB10120255	FLANGED SLEEVE BEARING
256	PSB10120256	OIL SEAL 24 X 35 X 8
257	PSB10120257	GEAR SHAFT
258	PK15M	KEY 5 X 5 X 35
259	P6001-OPEN	BALL BEARING 6001-OPEN
260	PR03M	EXT RETAINING RING 12MM
261	PSB10120261	FLANGED SLEEVE BEARING
401	PCAP26M	CAP SCREW M6-1 X 12

Gearbox Controls

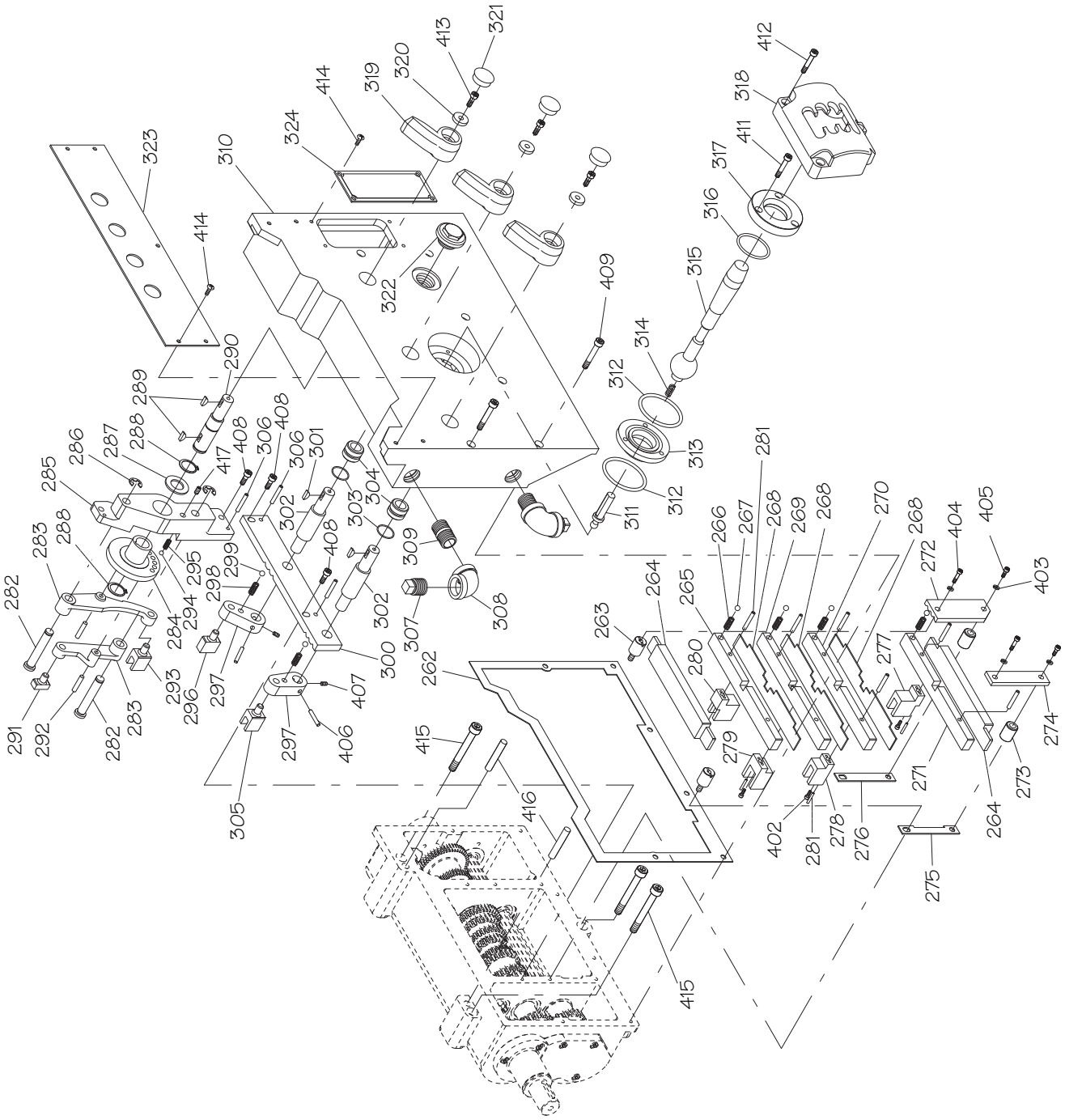

Gearbox Controls Parts List

REF	PART #	DESCRIPTION
262	PSB10120262	GEARBOX COVER GASKET
263	PSB10120263	PARTITION NUT
264	PSB10120264	UPPER PLATE
265	PSB10120265	UPPER FORK SUPPORT
266	PSB10120266	COMPRESSION SPRING 4 X 19
267	PSTB001	STEEL BALL 1/4
268	PSB10120268	PARTITION
269	PSB10120269	MIDDLE FORK SUPPORT
270	PSB10120270	LOWER FORK SUPPORT
271	PSB10120271	BOTTOM FORK SUPPORT
272	PSB10120272	REVERSE STOP PLATE
273	PSB10120273	PARTITION SPACER
274	PSB10120274	SHOULDER PLATE
275	PSB10120275	LEFT CONNECTOR PLATE
276	PSB10120276	RIGHT CONNECTOR PLATE
277	PSB10120277	BOTTOM FORK
278	PSB10120278	LOWER FORK
279	PSB10120279	MIDDLE FORK
280	PSB10120277	UPPER FORK
281	PRP02M	ROLL PIN 3 X 16
282	PSB10120282	CONNECTOR PIN
283	PSB10120283	PIVOT ARM
284	PSB10120284	CAM
285	PSB10120285	SHIFT BRACKET
286	PEC015M	E-CLIP 8MM
287	PSB10120287	BRACKET SPACER
288	PR18M	EXT RETAINING RING 17MM
289	PSB10120289	WOODRUFF KEY 4 X 13
290	PSB10120290	SHIFT ROD
291	PSB10120291	STOP BLOCK
292	PSB10120292	DOWEL PIN 5 X 24MM
293	PSB10120293	RIGHT SHIFT FORK
294	PSTB001	STEEL BALL 1/4
295	PSB10120295	COMPRESSION SPRING 6.25 X 18
296	PSB10120296	STOP BLOCK
297	PSB10120297	SHIFT ROCKER ARM
298	PSB10120298	COMPRESSION SPRING 6 X 13
299	PSTB001	STEEL BALL 1/4
300	PSB10120300	SHIFT SHAFT SUPPORT BAR

REF	PART #	DESCRIPTION
301	PSB10120289	WOODRUFF KEY 4 X 13
302	PSB10120302	SHIFT SHAFT
303	PORP018	O-RING 17.8 X 2.4 P18
304	PSB10120304	SHIFT SHAFT SLEEVE
305	PSB10120305	SHIFT FORK
306	PRP24M	ROLL PIN 5 X 16
307	PSB10120128	SQUARE HEAD PIPE PLUG 1/2 PT
308	PSB10120308	PIPE ELBOW 90 DEG 1/2 X 1/2 PT
309	PSB10120309	PIPE NIPPLE 1/2 X 1/2 PT X 1"
310	PSB10120310	GEARBOX COVER
311	PSB10120311	SELECTOR ROD
312	PORG040	O-RING 39.4 X 3.1 G40
313	PSB10120313	SELECTOR LEVER SUPPORT
314	PSB10120314	COMPRESSION SPRING 9 X 38
315	PSB10120315	SELECTOR LEVER
316	PORG030	O-RING 3.1 X 29.4 G30
317	PSB10120317	SELECTOR LEVER END CAP
318	PSB10120318	SELECTOR PLATE
319	PSB10120319	SHIFTING HANDLE
320	PSB10120015	HANDLE WASHER 5MM
321	PSB10120321	HANDLE CAP
322	PSB10120322	OIL SIGHT GLASS
323	PSB10120323	CONTROL PANEL
324	PSB10120324	FEED CLUTCH COVER
402	PCAP15M	CAP SCREW M5-.8 X 20
403	PLW03M	LOCK WASHER 6MM
404	PCAP26M	CAP SCREW M6-1 X 12
405	PCAP48M	CAP SCREW M6-1 X 35
406	PRP04M	ROLL PIN 4 X 24
407	PSS03M	SET SCREW M6-1 X 8
408	PCAP02M	CAP SCREW M6-1 X 20
409	PCAP167M	CAP SCREW M6-1 X 70
411	PCAP38M	CAP SCREW M5-.8 X 25
412	PCAP26M	CAP SCREW M6-1 X 12
413	PCAP33M	CAP SCREW M5-.8 X 12
414	PS17M	PHLP HD SCR M4-.7 X 6
415	PCAP66M	CAP SCREW M8-1.25 X 65
416	PSB10120416	TAPER PIN #3/#7 X 1/4"
417	PSB10120417	SHIFT BRACKET SET SCREW

Apron - Front View

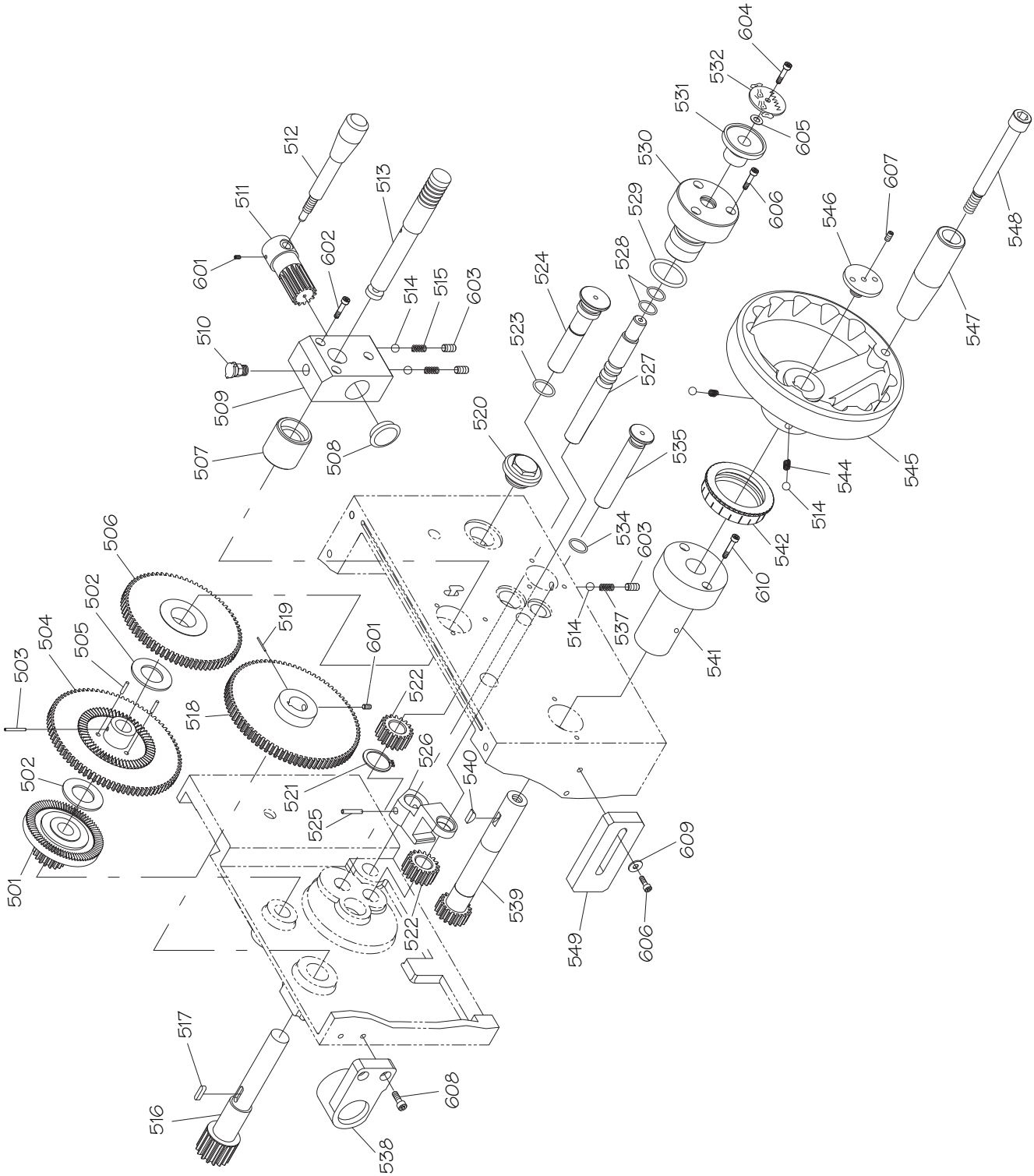

Apron - Front View Parts List

REF	PART #	DESCRIPTION
501	PSB10120501	DOUBLE GEAR 18T/60T
502	PSB10120502	GEAR SPACER
503	PRP20M	ROLL PIN 4 X 22
504	PSB10120504	DOUBLE GEAR 81T/60T
505	PSB10120505	DOWEL PIN 4 X 17MM
506	PSB10120506	DOUBLE GEAR 72T/60T
507	PSB10120507	SLEEVE BEARING
508	PSB10120508	BRACKET PLUG
509	PSB10120509	FEED CONTROL BRACKET
510	PSB10120510	OIL CUP
511	PSB10120511	SPLINE SHAFT
512	PSB10120512	FEED CONTROL HANDLE
513	PSB10120513	FEED CONTROL WORM
514	PSTB001	STEEL BALL 1/4
515	PSB10120515	COMPRESSION SPRING 6 X 16
516	PSB10120516	GEAR SHAFT
517	PK14M	KEY 5 X 5 X 18
518	PSB10120518	INCH GEAR 81T
519	PRP10M	ROLL PIN 5 X 36
520	PSB10120520	OIL SIGHT GLASS
521	PR06M	EXT RETAINING RING 16MM
522	PSB10120522	GEAR 18T
523	PORP018	O-RING 17.8 X 2.4 P18
524	PSB10120524	GEAR SHAFT
525	PRP04M	ROLL PIN 4 X 24
526	PSB10120526	FEED DIRECTION PIVOT ARM
527	PSB10120527	FEED DIRECTION SHAFT
528	PORP016	O-RING 15.8 X 2.4 P16

REF	PART #	DESCRIPTION
529	PORP026	O-RING 25.7 X 3.5 P26
530	PSB10120530	FEED DIRECTION SHAFT SLEEVE
531	PSB10120531	FEED DIRECTION KNOB
532	PSB10120532	DIRECTION PLATE
534	PORP012	O-RING 11.8 X 2.4 P12
535	PSB10120535	GEAR SHAFT
537	PSB10120266	COMPRESSION SPRING 4 X 19
538	PSB10120538	SUPPORT BRACKET
539	PSB10120539	GEAR SHAFT 18T
540	PSB10120218	WOODRUFF KEY 5 X 19
541	PSB10120541	INCH GEAR SHAFT SLEEVE
542	PSB10120542	INCH INDEX RING
544	PSB10120515	COMPRESSION SPRING 6 X 16
545	PSB10120545	HANDWHEEL
546	PSB10120546	HANDWHEEL WASHER 6MM
547	PSB10120547	HANDWHEEL HANDLE
548	PSB10120548	HANDLE CAP SCREW
549	PSB10120549	SAFETY PLATE
601	PSS26M	SET SCREW M5-.8 X 6
602	PCAP79M	CAP SCREW M5-.8 X 35
603	PSS20M	SET SCREW M8-1.25 X 8
604	PCAP33M	CAP SCREW M5-.8 X 12
605	PW03M	FLAT WASHER 6MM
606	PCAP06M	CAP SCREW M6-1 X 25
607	PSS12M	SET SCREW M6-1 X 25
608	PCAP01M	CAP SCREW M6-1 X 16
609	PW03M	FLAT WASHER 6MM
610	PCAP38M	CAP SCREW M5-.8 X 25

Apron - Rear View

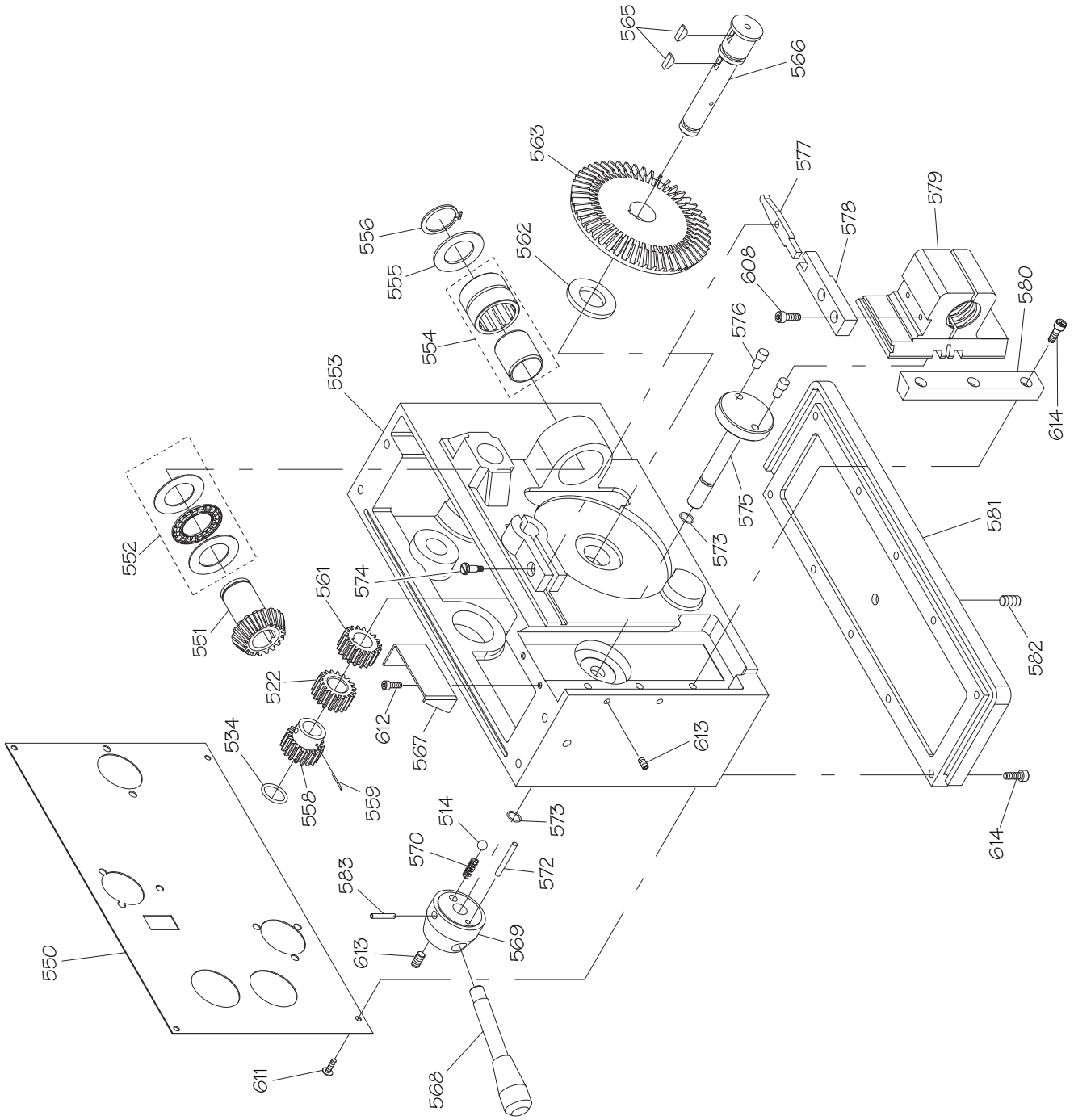

Apron - Rear View Parts List

REF	PART #	DESCRIPTION
514	PSTB001	STEEL BALL 1/4
522	PSB10120522	GEAR 18T
534	PORP012	O-RING 11.8 X 2.4 P12
550	PSB10120550	APRON FRONT PLATE
551	PSB10120551	BEVEL GEAR 23T
552	PSB10120552	THRUST BEARING NTB/AS-2542
553	PSB10120553	APRON CASTING
554	PSB10120554	NEEDLE BEARING NK29/30
555	PSB10120555	BEARING SPACER
556	PR11M	EXT RETAINING RING 25MM
558	PSB10120558	GEAR 18T
559	PRP88M	ROLL PIN 5 X 22
561	PSB10120561	GEAR 18T
562	PSB10120562	GEAR SPACER
563	PSB10120563	BEVEL GEAR 64T
565	PSB10120289	WOODRUFF KEY 4 X 13
566	PSB10120566	HALF-NUT LEVER SHAFT
567	PSB10120567	OIL FENCE
568	PSB10120568	HALF-NUT LEVER

REF	PART #	DESCRIPTION
569	PSB10120569	HALF-NUT LEVER HUB
570	PSB10120046	COMPRESSION SPRING 6 X 27
572	PRP04M	ROLL PIN 4 X 24
573	PORP020	O-RING 19.8 X 2.4 P20
574	PSB10120574	CLAMP STEP SCREW
575	PSB10120575	CAM SHAFT
576	PSB10120576	STEP PIN
577	PSB10120577	PIVOT LEVER
578	PSB10120578	RETAINING BLOCK
579	PSB10120579	INCH HALF-NUT
580	PSB10120580	HALF-NUT GIB
581	PSB10120581	APRON CASTING BOTTOM COVER
582	PSB10120582	OIL DRAIN PLUG 1/8 PT
583	PRP102M	ROLL PIN 4 X 36
608	PCAP01M	CAP SCREW M6-1 X 16
611	PS17M	PHLP HD SCR M4-.7 X 6
612	PCAP03M	CAP SCREW M5-.8 X 8
613	PSS02M	SET SCREW M6-1 X 6
614	PCAP24M	CAP SCREW M5-.8 X 16

Dial Indicator

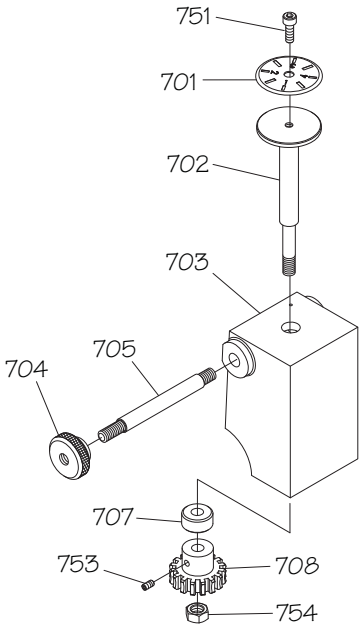

REF	PART #	DESCRIPTION
701	PSB10120701	DIAL INDICATOR INDEX PLATE
702	PSB10120702	PIVOT SHAFT
703	PSB10120703	DIAL INDICATOR CASTING
704	PSB10120704	KNURLED KNOB
705	PSB10120705	DOUBLE-THREADED STUD
707	PSB10120707	GEAR SPACER
708	PSB10120708	DIAL GEAR 16T
751	PCAP04M	CAP SCREW M6-1 X 10
753	PSS02M	SET SCREW M6-1 X 6
754	PN03M	HEX NUT M8-1.25

Carriage Stop

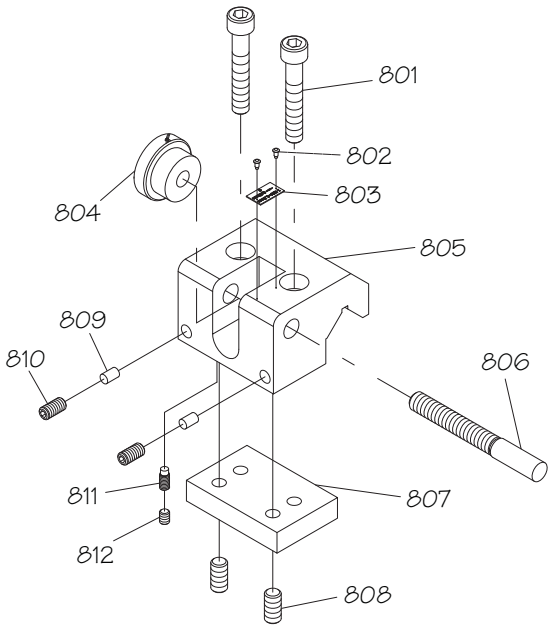

REF	PART #	DESCRIPTION
801	PCAP71M	CAP SCREW M10-1.5 X 60
802	PRIV001M	STEEL FLUTED RIVET 2 X 5MM
803	PSB10120803	INCH INDEX RING
804	PSB10120804	INCH MICROMETER DIAL
805	PSB10120805	CARRIAGE STOP BODY
806	PSB10120806	INCH THREADED STOP ROD
807	PSB10120807	CLAMP PLATE
808	PSS10M	SET SCREW M10-1.5 X 20
809	PSB10120809	COPPER PLUNGER
810	PSS06M	SET SCREW M8-1.25 X 16
811	PSB10120811	EXTENDED POINT SET SCREW M6-1 X 12
812	PSS14M	SET SCREW M8-1.25 X 12

Compound Slide & Tool Post

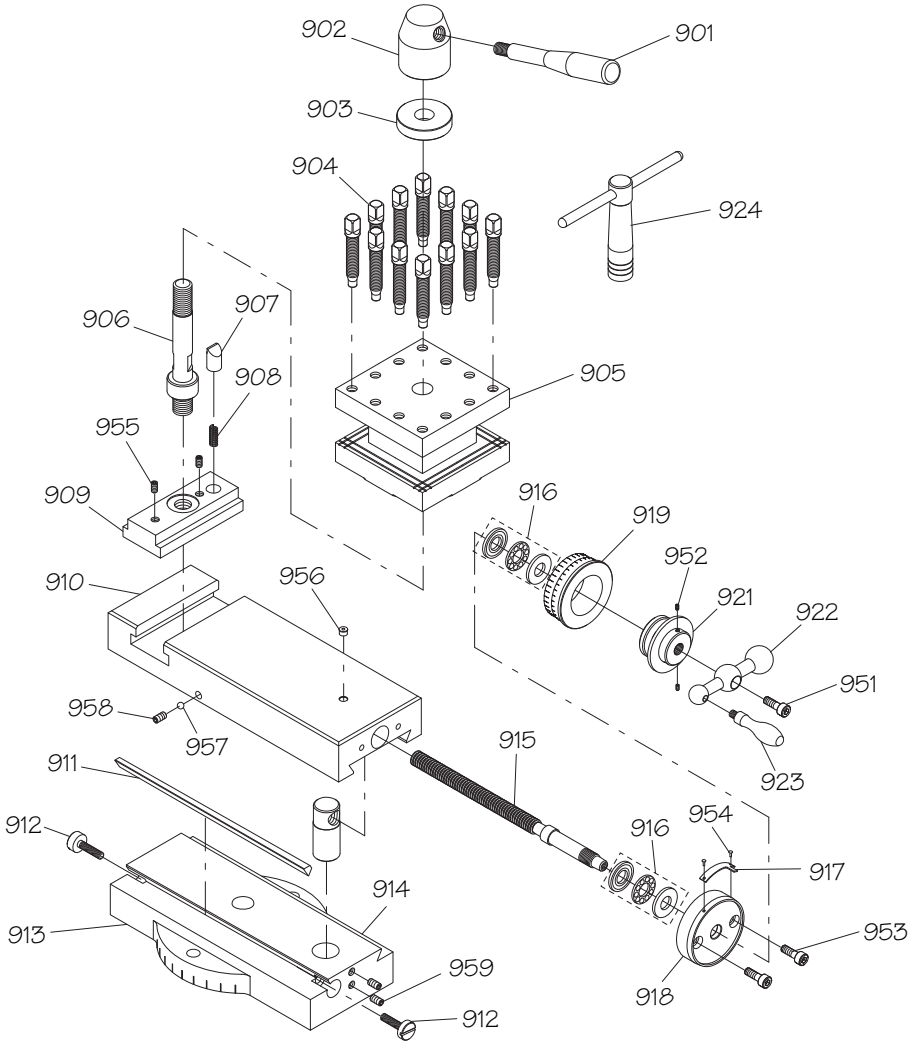

REF	PART #	DESCRIPTION
901	PSB10120901	TOOL POST HANDLE
902	PSB10120902	TURRET NUT
903	PSB10120903	TURRET NUT COLLAR
904	PSB10120904	TOOL POST BOLT
905	PSB10120905	TOOL POST BODY
906	PSB10120906	TOOL POST STUD
907	PSB10120907	BEVELED PLUNGER
908	PSB10120908	COMPRESSION SPRING 6 X 27
909	PSB10120909	TOOL POST BASE
910	PSB10120910	COMPOUND SLIDE
911	PSB10120911	COMPOUND GIB
912	PSB10120912	GIB ADJUSTMENT SCREW
913	PSB10120913	COMPOUND SWIVEL BASE
914	PSB10120914	COMPOUND LEADSCREW NUT
915	PSB10120915	COMPOUND LEADSCREW
916	P51101	THRUST BEARING 51101

REF	PART #	DESCRIPTION
917	PSB10120917	INDEX PLATE
918	PSB10120918	LEADSCREW SUPPORT BRACKET
919	PSB10120919	DUAL INDEX RING
921	PSB10120921	LEADSCREW BEARING HOUSING
922	PSB10120922	BALL HANDLE
923	PSB10120923	HANDLE
924	PSB10120924	TOOL POST BOLT KEY
951	PCAP01M	CAP SCREW M6-1 X 16
952	PSS04M	SET SCREW M6-1 X 12
953	PCAP26M	CAP SCREW M6-1 X 12
954	PRIV001M	STEEL FLUTED RIVET 2 X 5MM
955	PSS14M	SET SCREW M8-1.25 X 12
956	PLUBE001	TAP-IN BALL OILER 1/4
957	PSTB001	STEEL BALL 1/4
958	PSS14M	SET SCREW M8-1.25 X 12
959	PSS03M	SET SCREW M6-1 X 8

Saddle Body & Controls

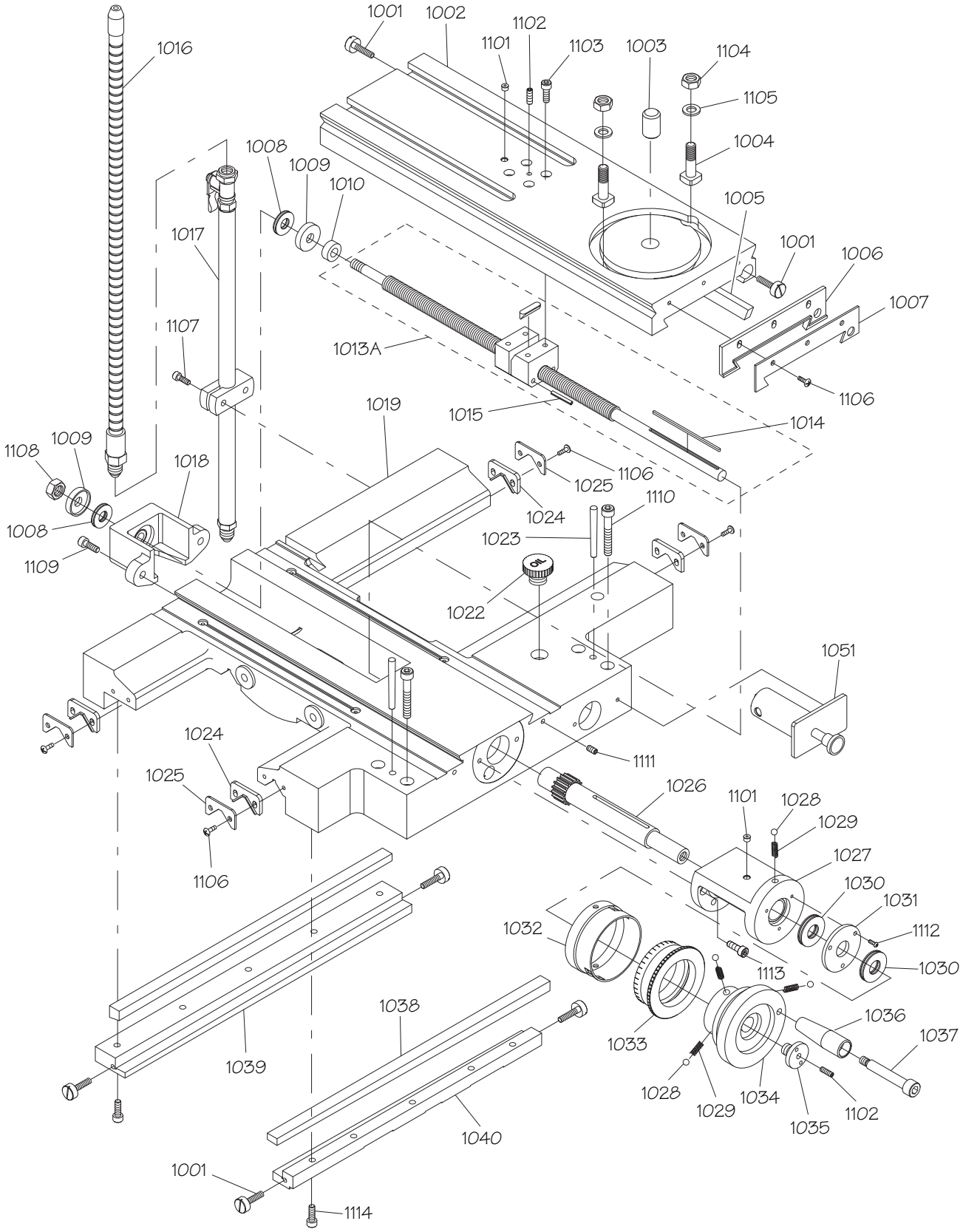

Saddle Body & Controls Parts List

REF	PART #	DESCRIPTION
1001	PSB10121001	CROSS GIB ADJUSTMENT SCREW
1002	PSB10121002	CROSS SLIDE
1003	PSB10121003	PIVOT STUD 18 X 28
1004	PSB10121004	COMPOUND T-BOLT
1005	PSB10121005	CROSS SLIDE GIB
1006	PSB10121006	CROSS WAY WIPER
1007	PSB10121007	CROSS WAY WIPER PLATE
1008	PSB10121008	THRUST BEARING NTB/AS2-1226
1009	PSB10121009	BEARING COLLAR
1010	PSB10121010	LEADSCREW SLEEVE BEARING
1013A	PSB10121013A	CROSS SLIDE LEADSCREW W/NUT ASSY
1014	PK165M	KEY 3 X 3 X 100
1015	PRP28M	ROLL PIN 5 X 40
1016	PSB10121016	COOLANT NOZZLE 3/8 PT X 24"
1017	PSB10121017	COOLANT STAND PIPE/VALVE 3/8 PT
1018	PSB10121018	CROSS LEADSCREW END BRACKET
1019	PSB10121019	SADDLE
1022	PSB10121022	SADDLE OIL FILL PLUG
1023	PSB10121023	TAPER PIN #6 X #2 X 3/4"
1024	PSB10121024	BEDWAY WIPER
1025	PSB10121025	BEDWAY WIPER PLATE
1026	PSB10121026	PINION 160DP 16T
1027	PSB10121027	PINION BRACKET
1028	PSTB001	STEEL BALL 1/4
1029	PSB10121029	COMPRESSION SPRING 6 X 15
1030	PSB10121030	THRUST BEARING NTB/AS2 1730

REF	PART #	DESCRIPTION
1031	PSB10121031	BEARING CAP 18 X 52 X 4
1032	PSB10121032	INDEX DIAL HOUSING
1033	PSB10121033	DUAL INDEX RING
1034	PSB10121034	CARRIAGE HANDWHEEL
1035	PSB10121035	HANDWHEEL WASHER 6MM
1036	PSB10121036	HANDWHEEL HANDLE
1037	PSB10121037	HANDWHEEL HANDLE SCREW
1038	PSB10121038	SADDLE GIB
1039	PSB10121039	REAR GIB PRESSURE BAR
1040	PSB10121040	FRONT GIB PRESSURE BAR
1051	PSB10121051	SADDLE OIL PUMP ASSEMBLY
1101	PLUBE001	TAP-IN BALL OILER 1/4
1102	PSS28M	SET SCREW M6-1 X 30
1103	PCAP07M	CAP SCREW M6-1 X 30
1104	PN02M	HEX NUT M10-1.5
1105	PW04M	FLAT WASHER 10MM
1106	PS08M	PHLP HD SCR M5-.8 X 12
1107	PCAP06M	CAP SCREW M6-1 X 25
1108	PN02M	HEX NUT M10-1.5
1109	PCAP02M	CAP SCREW M6-1 X 20
1110	PCAP35M	CAP SCREW M8-1.25 X 60
1111	PSS03M	SET SCREW M6-1 X 8
1112	PCAP17M	CAP SCREW M4-.7 X 10
1113	PCAP02M	CAP SCREW M6-1 X 20
1114	PCAP02M	CAP SCREW M6-1 X 20

Saddle Base

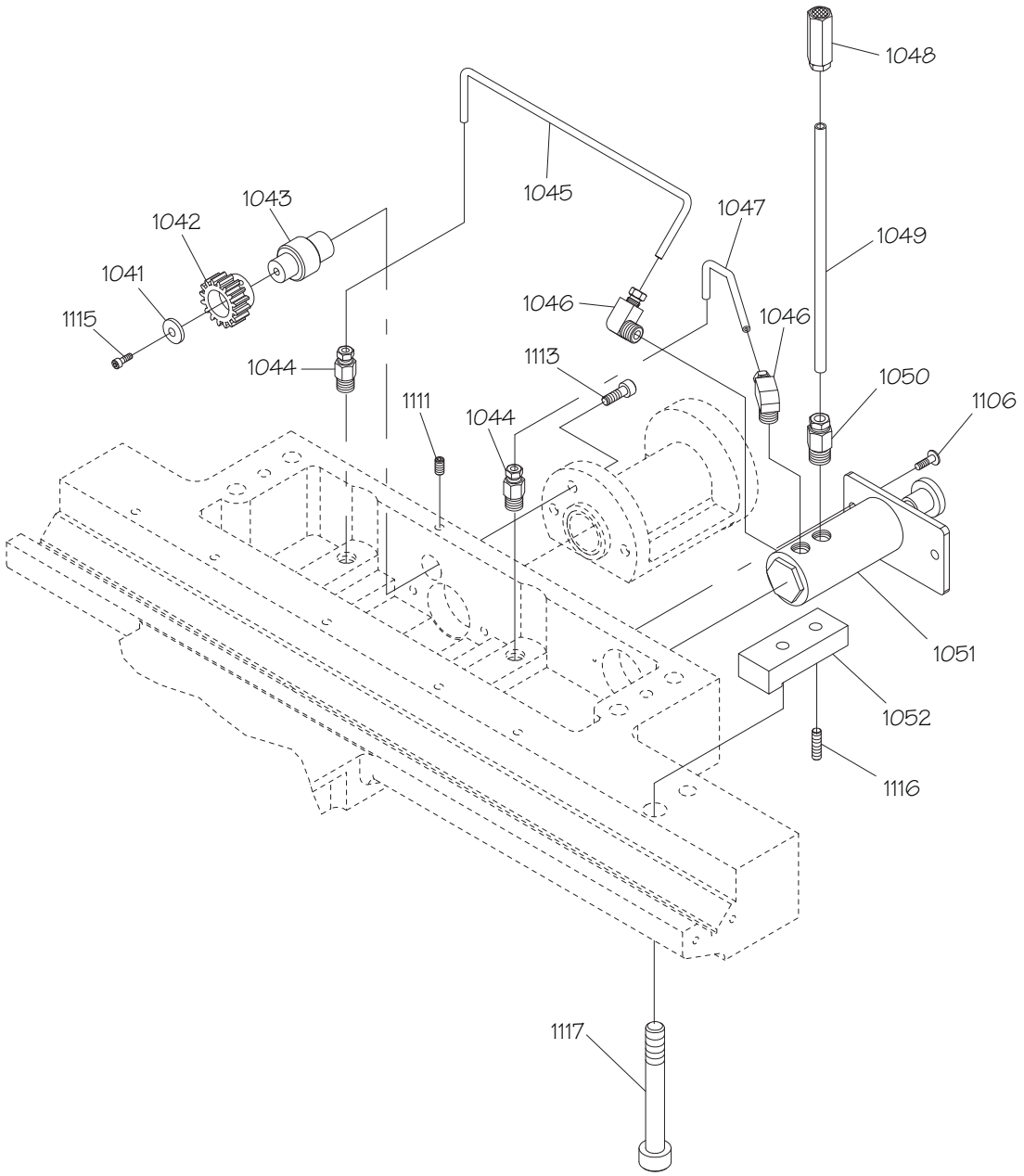

REF	PART #	DESCRIPTION
1041	PSB10121041	GEAR WASHER 5MM
1042	PSB10121042	GEAR 16T
1043	PSB10121043	GEAR SHAFT
1044	PSB10121044	STRAIGHT PIPE ADAPTER 1/8 PT X 4MM
1045	PSB10121045	ALUMINUM TUBE 4 X 260MM
1046	PSB10121046	ELBOW ADAPTER 1/8 PT X 4MM
1047	PSB10121047	ALUMINUM TUBE 4 X 120MM
1048	PSB10121048	OIL FILTER 6MM
1049	PSB10121049	ALUMINUM TUBE 6 X 160MM

REF	PART #	DESCRIPTION
1050	PSB10121050	STRAIGHT PIPE ADAPTER 1/8 PT X 6MM
1051	PSB10121051	SADDLE OIL PUMP ASSEMBLY
1052	PSB10121052	SUPPORT BRACKET
1106	PS08M	PHLP HD SCR M5-.8 X 12
1111	PSS03M	SET SCREW M6-1 X 8
1113	PCAP02M	CAP SCREW M6-1 X 20
1115	PCAP24M	CAP SCREW M5-.8 X 16
1116	PSS74M	SET SCREW M8-1.25 X 35
1117	PCAP169M	CAP SCREW M12-1.75 X 75

Bed & Shafts

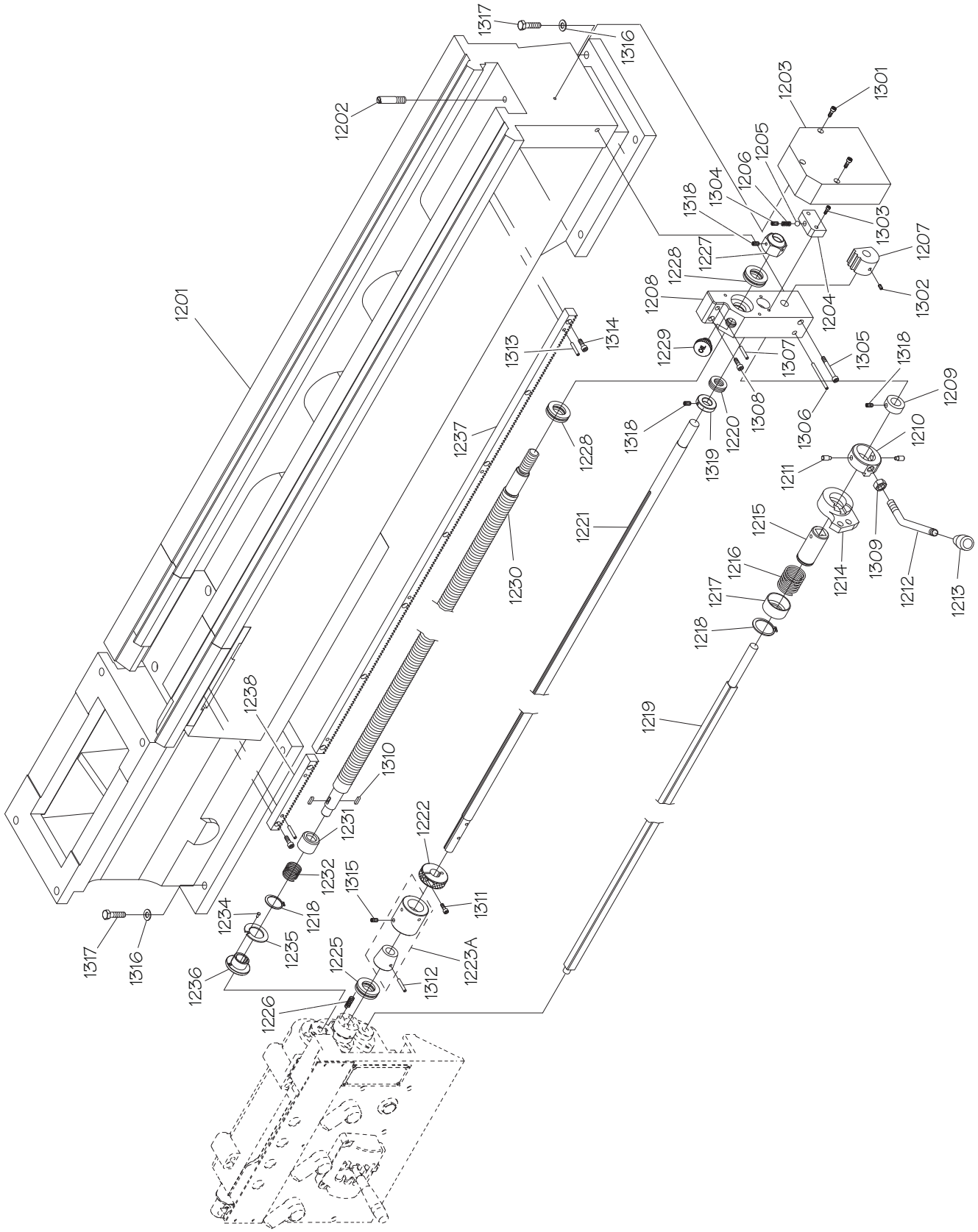
1317
1316
1202
1203
1301
1205
1206
1304
1318
1303
1227
1228
1207
1208
1204
1302
1201
1313
1314
1229
1307
1305
1318
1209
1237
1228
1318
1220
1308
1306
1210
1319
1211
1221
1215
1230
1309
1214
1216
1212
1217
1213
1218
1238
1219
1310
1231
1222
1232
1315
1311
1234
1218
1235
1225
1223A
1317
1316
1236
1312
1226

Bed & Shafts Parts List

REF	PART #	DESCRIPTION
1201	PSB10121201	BED CASTING
1202	PSB10121202	BED END STOP BOLT
1203	PSB10121203	SHAFT END BRACKET COVER
1204	PSB10121204	FEED ROD END BRACKET
1205	PSTB002	STEEL BALL 5/16
1206	PSB10121206	COMPRESSION SPRING 8 X 27
1207	PSB10121207	SPINDLE ROD END BRACKET
1208	PSB10121208	SHAFT END BRACKET
1209	PSB10121209	LOCK COLLAR
1210	PSB10121210	SPINDLE LEVER HUB
1211	PSB10121211	STEP PIN
1212	PSB10121212	SPINDLE ROD LEVER
1213	PSB10121213	SPINDLE ROD LEVER KNOB
1214	PSB10121214	SPINDLE LEVER HUB BRACKET
1215	PSB10121215	SPINDLE ROD SLEEVE
1216	PSB10121216	COMPRESSION SPRING 38 X 75
1217	PSB10121217	SPRING HOUSING
1218	PR37M	EXT RETAINING RING 32MM
1219	PSB10121219	SPINDLE ROD
1220	PSB10121220	THRUST BEARING NTB/AS2 1831
1221	PSB10121221	FEED ROD
1223A	PSB10121223A	CLUTCH COLLAR ASSEMBLY
1225	P51203	THRUST BEARING 51203
1226	PSB10121226	COMPRESSION SPRING 9 X 32
1227	PSB10121227	LEADSCREW LOCK NUT
1228	P51105	THRUST BEARING 51105
1229	PSB10121229	OIL FILL PLUG

REF	PART #	DESCRIPTION
1230	PSB10121230	INCH LEADSCREW 4 TPI
1231	PSB10121231	LEADSCREW SLEEVE BEARING
1232	PSB10121232	COMPRESSION SPRING 27 X 55
1234	PSB10121234	LEADSCREW SHEAR PIN
1235	PSB10121235	SHEAR PIN WASHER
1236	PSB10121236	SHEAR PIN COLLAR
1237	PSB10121237	LONGITUDINAL RACK
1238	PSB10121238	GAP RACK
1301	PCAP83M	CAP SCREW M6-1 X 55
1302	PSS11M	SET SCREW M6-1 X 16
1303	PCAP06M	CAP SCREW M6-1 X 25
1304	PSS30M	SET SCREW M10-1.5 X 10
1305	PCAP128M	CAP SCREW M8-1.25 X 70
1306	PSB10121306	TAPER PIN #7 X #3 X 1/4"
1307	PSB10121307	DOWEL PIN #2 X 2"
1308	PCAP40M	CAP SCREW M8-1.25 X 35
1309	PN09M	HEX NUT M12-1.75
1310	PK20M	KEY 5 X 5 X 15
1311	PCAP02M	CAP SCREW M6-1 X 20
1312	PSB10121312	DOWEL PIN 4 X 30MM
1313	PRP93M	ROLL PIN 6 X 25
1314	PCAP02M	CAP SCREW M6-1 X 20
1315	PSS02M	SET SCREW M6-1 X 6
1316	PW06M	FLAT WASHER 12MM
1317	PB24M	HEX BOLT M12-1.75 X 45
1318	PSS03M	SET SCREW M6-1 X 8
1319	PSB10121319	FEED ROD LOCK COLLAR

End Gears

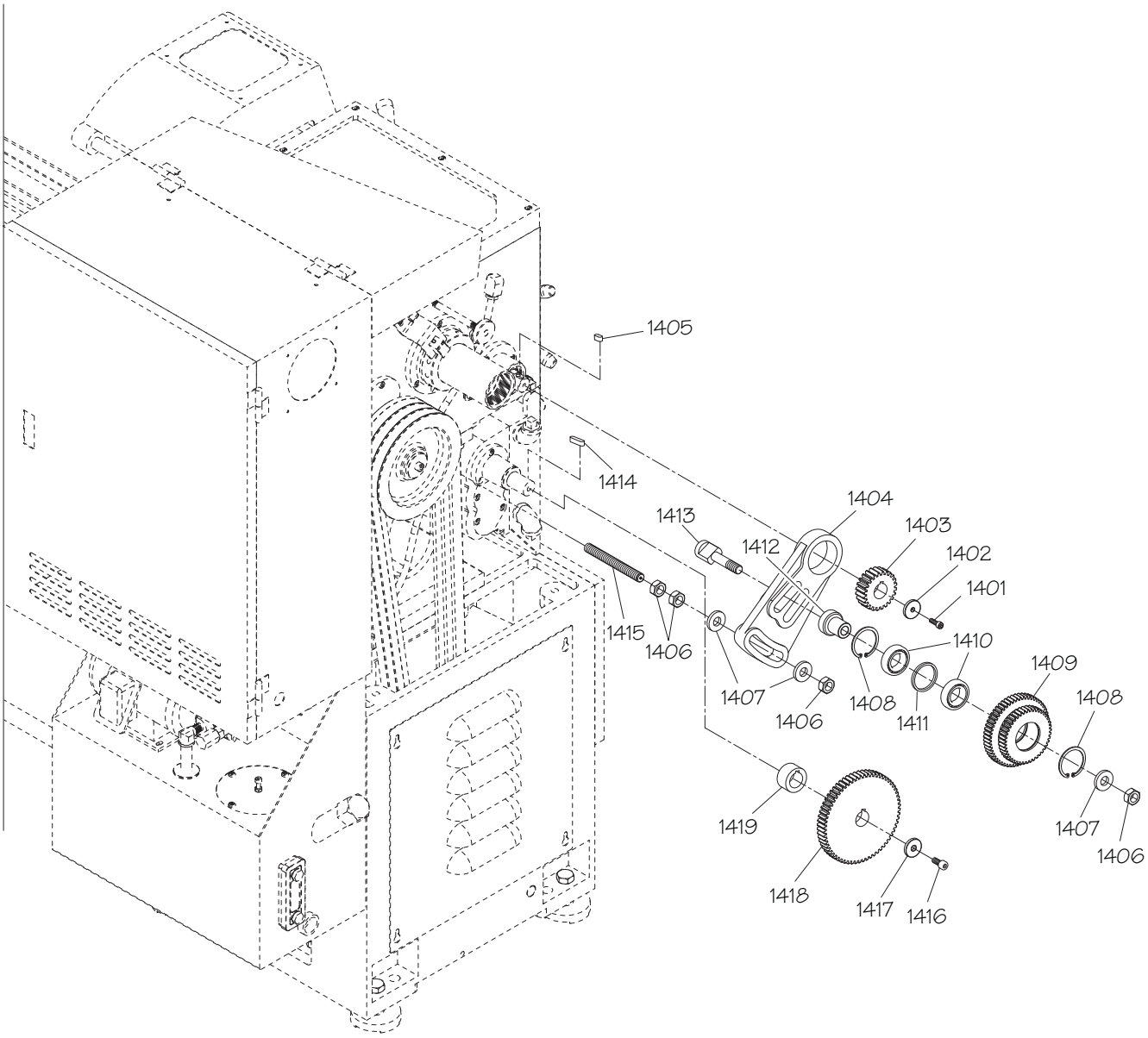

REF	PART #	DESCRIPTION
1401	PCAP02M	CAP SCREW M6-1 X 20
1402	PSB10121402	GEAR WASHER 6MM
1403	PSB10121403	GEAR 24T
1404	PSB10121404	PIVOT ARM
1405	PK166M	KEY 7 X 7 X 15
1406	PN32M	HEX NUT M14-2
1407	PSB10121407	GEAR WASHER 14MM
1408	PR25M	INT RETAINING RING 47MM
1409	PSB10121409	DOUBLE GEAR 44T/56T
1410	P6005ZZ	BALL BEARING 6005ZZ

REF	PART #	DESCRIPTION
1411	PSB10121411	BEARING SPACER
1412	PSB10121412	GEAR SHAFT BUSHING
1413	PSB10121413	GEAR SHAFT
1414	PK28M	KEY 7 X 7 X 30
1415	PSB10121415	PIVOT ARM STUD
1416	PCAP14M	CAP SCREW M8-1.25 X 20
1417	PSB10121417	GEAR WASHER 8MM
1418	PSB10121418	GEAR 57T
1419	PSB10121419	GEAR BUSHING

Motor Assembly

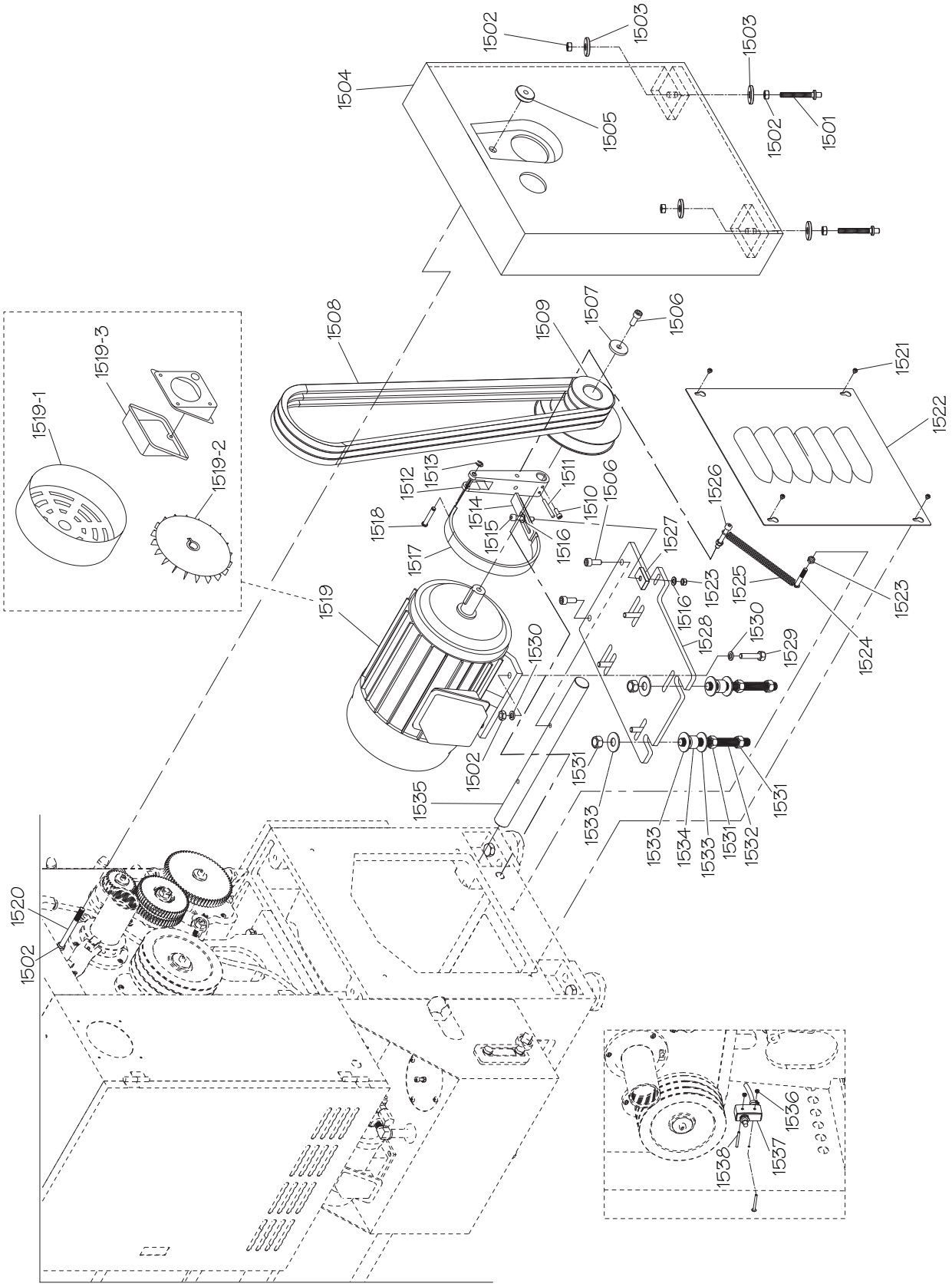

Motor Assembly Parts List

REF	PART #	DESCRIPTION
1501	PSB10121501	SIDE COVER MOUNTING PIN
1502	PN02M	HEX NUT M10-1.5
1503	PW04M	FLAT WASHER 10MM
1504	PSB10121504	LEFT TOP SIDE COVER
1505	PSB10121505	KNURLED SIDE COVER KNOB M10-1.5
1506	PCAP64M	CAP SCREW M10-1.5 X 25
1507	PSB10121507	PULLEY WASHER 10 X 39 X 5MM
1508	PVB69	V-BELT B69
1509	PSB10121509	MOTOR PULLEY
1510	PCAP01M	CAP SCREW M6-1 X 16
1511	PSB10121511	TAPER PIN #4 X #1 X 3/4"
1512	PSB10121512	BRAKE BELT BRACKET
1513	PEC09M	E-CLIP 6MM
1514	PSB10121514	BRAKE BELT ADJUSTMENT BAR
1515	PCAP45M	CAP SCREW M8-1.25 X 45
1516	PW01M	FLAT WASHER 8MM
1517	PSB10121517	BRAKE BELT
1518	PSB10121518	CAPTIVE PIN
1519	PSB10121519	MOTOR 5HP 220/440V 3PH 60HZ
1519-1	PSB10121519-1	MOTOR FAN COVER
1519-2	PSB10121519-2	MOTOR FAN

REF	PART #	DESCRIPTION
1519-3	PSB10121519-3	MOTOR JUNCTION BOX
1520	PSB10121520	SIDE COVER MOUNTING STUD
1521	PS68M	PHLP HD SCR M6-1 X 10
1522	PSB10121522	MOTOR COVER
1523	PN03M	HEX NUT M8-1.25
1524	PSB10121524	SPRING MOUNTING STUD
1525	PSB10121525	BRAKE BELT EXTENSION SPRING
1526	PCAP60M	CAP SCREW M8-1.25 X 55
1527	PSB10121527	MOUNTING INSERT
1528	PSB10121528	MOTOR MOUNTING 10T/395 X 300MM
1529	PB31M	HEX BOLT M10-1.5 X 40
1530	PLW06M	LOCK WASHER 10MM
1531	PN13M	HEX NUT M16-2
1532	PSB10121532	ALL-THREAD STUD M16-2 X 170
1533	PW08M	FLAT WASHER 16MM
1534	PSB10121534	RUBBER CUSHION SLEEVE
1535	PSB10121535	MOTOR SUPPORT SHAFT
1536	PN04M	HEX NUT M4-.7
1537	PSB10121537	SIDE COVER SAFETY SWITCH TM1307
1538	PS65M	PHLP HD SCR M4-.7 X 40

Cabinets & Panels

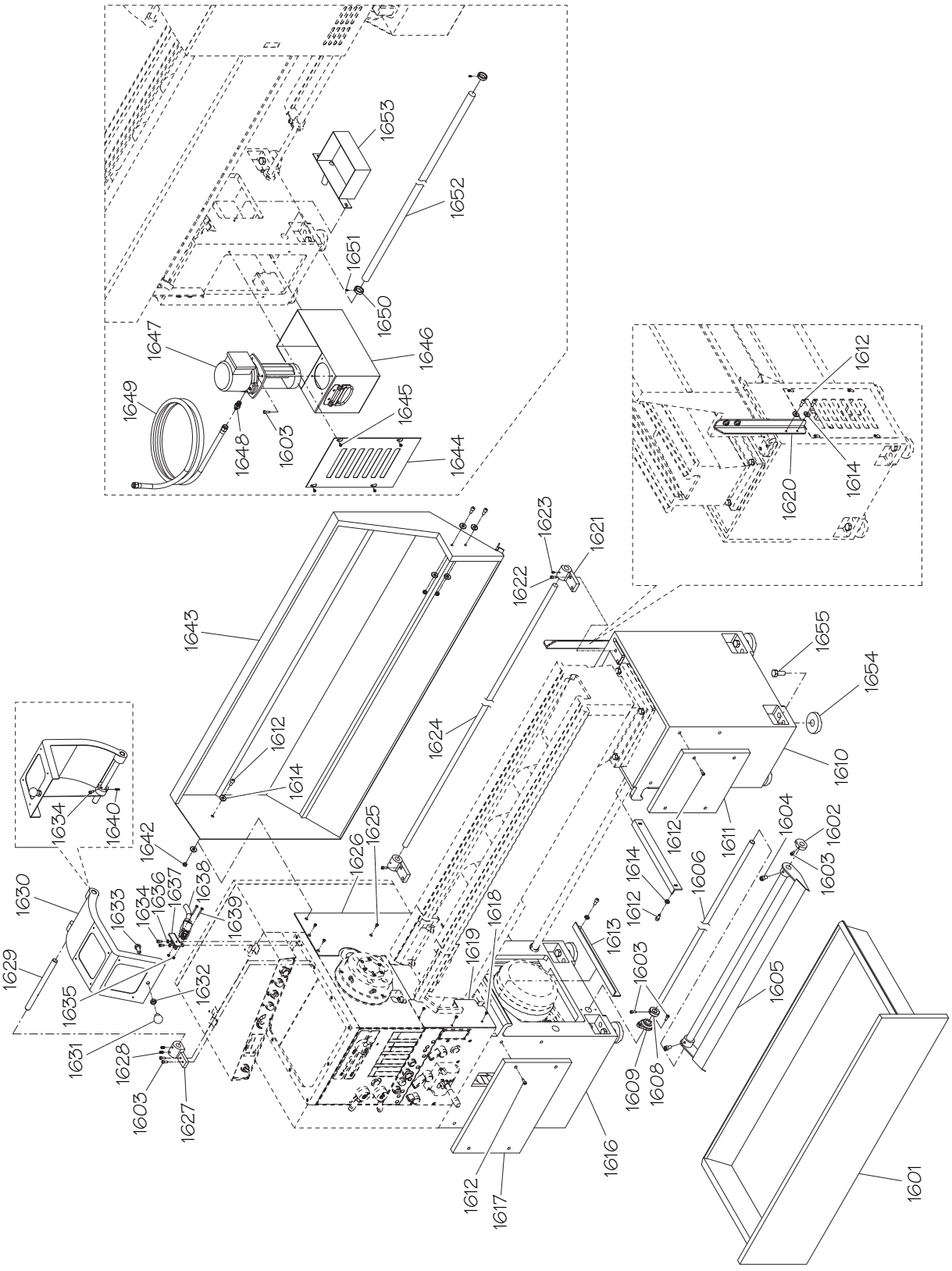

Cabinets & Panels Parts List

REF	PART #	DESCRIPTION
1601	PSB10121601	CHIP TRAY
1602	PSB10121602	BRAKE CAM
1603	PCAP01M	CAP SCREW M6-1 X 16
1604	PB56M	CAP SCREW M10-1.5 X 20
1605	PSB10121605	BRAKE FOOT PEDAL
1606	PSB10121606	BRAKE SHAFT
1608	PSB10121608	LOCK COLLAR
1609	PSB10121609	BRAKE SHAFT BRACKET
1610	PSB10121610	RIGHT CABINET
1611	PSB10121611	RIGHT FRONT CABINET COVER
1612	PCAP64M	CAP SCREW M10-1.5 X 25
1613	PSB10121613	CHIP TRAY L-BRACKET
1614	PW04M	FLAT WASHER 10MM
1616	PSB10121616	LEFT CABINET
1617	PSB10121617	LEFT FRONT CABINET COVER
1618	PS05M	PHLP HD SCR M5-.8 X 8
1619	PSB10121619	RIGHT GEARBOX COVER
1620	PSB10121620	SPLASH PAN SUPPORT BRACKET
1621	PSB10121621	SPLASH PAN ROD BRACKET
1622	PCAP02M	CAP SCREW M6-1 X 20
1623	PSS01M	SET SCREW M6-1 X 10
1624	PSB10121624	SPLASH PAN ROD
1625	PFH30M	FLAT HD SCR M5-.8 X 8
1626	PSB10121626	ELECTRICAL CABINET BACK PLATE
1627	PSB10121627	CHUCK GUARD BRACKET
1628	PSS14M	SET SCREW M8-1.25 X 12

REF	PART #	DESCRIPTION
1629	PSB10121629	CHUCK GUARD ROD
1630	PSB10121630	CHUCK GUARD
1631	PSB10121631	KNOB 1/2-13
1632	PN06	HEX NUT 1/2-13
1633	PB102	HEX BOLT 1/2-13 X 3/4
1634	PCAP26M	CAP SCREW M6-1 X 12
1635	PN04M	HEX NUT M4-.7
1636	PLW03M	LOCK WASHER 6MM
1637	PSB10121637	SAFETY SWITCH BRACKET
1638	PSB10121638	CHUCK GUARD SAFETY SWITCH
1639	PS65M	PHLP HD SCR M4-.7 X 40
1640	PSS34M	SET SCREW M5-.8 X 16
1642	PN03M	HEX NUT M8-1.25
1643	PSB10121643	SPLASH GUARD
1644	PSB10121644	REAR CABINET COVER
1645	PS68M	PHLP HD SCR M6-1 X 10
1646	PSB10121646	COOLANT RESERVOIR
1647	PSB10121647	COOLANT PUMP
1648	PSB10121648	HOSE CONNECTOR 1/8 PT X 3/8 PH
1649	PSB10121649	COOLANT HOSE CT801 3/8 X 72"
1650	PSB10121650	LOCK COLLAR
1651	PSS03M	SET SCREW M6-1 X 8
1652	PSB10121652	CABINET SUPPORT ROD
1653	PSB10121653	COOLANT RETURN CHUTE
1654	PSB10121654	CAST IRON FOOT PAD
1655	PB80M	HEX BOLT M16-2 X 55

Headstock Oiling System

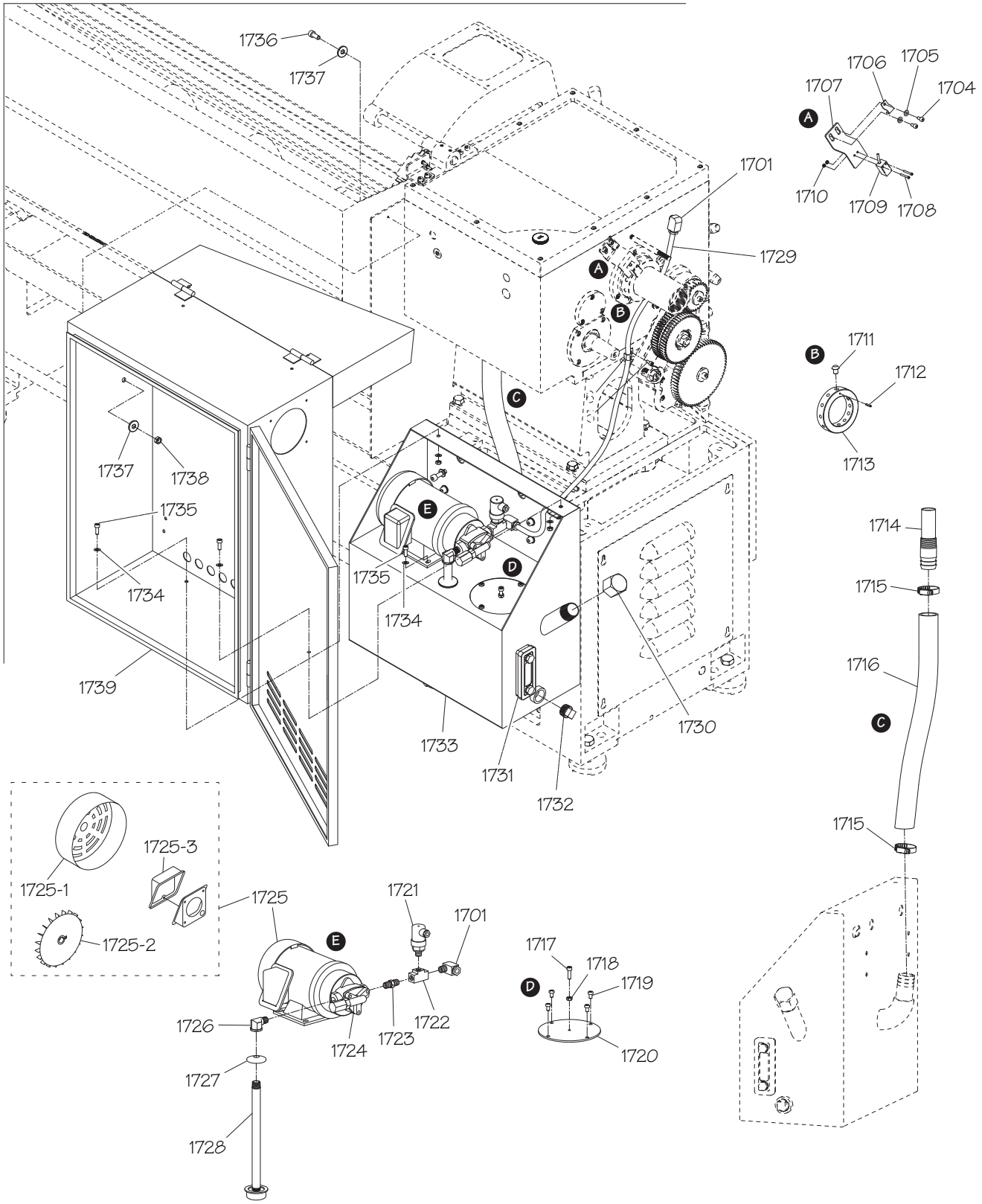

Headstock Oiling System Parts List

REF	PART #	DESCRIPTION
1701	PSB10121701	ELBOW CONNECTOR
1704	PCAP50M	CAP SCREW M5-.8 X 10
1705	PW02M	FLAT WASHER 5MM
1706	PSB10121706	PIPE CLAMP 10MM
1707	PSB10121707	SENSOR BRACKET
1708	PS34	PHLP HD SCR M3-.5 X 25
1709	PSB10121709	SPINDLE SPEED SENSOR
1710	PN07M	HEX NUT M3-.5
1711	PSB10121711	MINOR TIP
1712	PRP02M	ROLL PIN 3 X 16
1713	PSB10121713	SPINDLE BALANCE RING
1714	PSB10121714	HEADSTOCK OIL DRAIN SCREEN
1715	PSB10121715	HOSE CLAMP 1-3/4"
1716	PSB10121716	OIL RETURN HOSE 1-1/4 X 17"
1717	PCAP02M	CAP SCREW M6-1 X 20
1718	PN01M	HEX NUT M6-1
1719	PCAP04M	CAP SCREW M6-1 X 10
1720	PSB10121720	OIL RESERVOIR COVER 129.5MM
1721	PSB10121721	OIL PRESSURE SWITCH
1722	PSB10121722	PIPE T-JOINT 1/4 PT

REF	PART #	DESCRIPTION
1723	PSB10121723	PIPE CONNECTOR 1/4 PT X 1/4 PT
1724	PSB10121724	LUBRICATION PUMP
1725	PSB10121725	LUBRICATION MOTOR 1/4HP 220V 3PH
1725-1	PSB10121725-1	MOTOR FAN COVER
1725-2	PSB10121725-2	MOTOR FAN
1725-3	PSB10121725-3	MOTOR JUNCTION BOX
1726	PSB10121726	ELBOW CONNECTOR 3/8 PT X 1/4 PT
1727	PSB10121727	RUBBER RING 3/8"
1728	PSB10121728	STAND PIPE 3/8 PT X 8"
1729	PSB10121729	NYLON OIL DELIVERY TUBE 10 X 100MM
1730	PSB10121730	OIL RESERVOIR FILL CAP 1 PT
1731	PSB10121731	OIL LEVEL GLASS 3"
1732	PSB10121732	OIL DRAIN PLUG 3/4 PT
1733	PSB10121733	OIL RESERVOIR
1734	PW03M	FLAT WASHER 6MM
1735	PCAP01M	CAP SCREW M6-1 X 16
1736	PCAP14M	CAP SCREW M8-1.25 X 20
1737	PW01M	FLAT WASHER 8MM
1738	PN03M	HEX NUT M8-1.25
1739	PSB10121739	ELECTRICAL CABINET

Tailstock

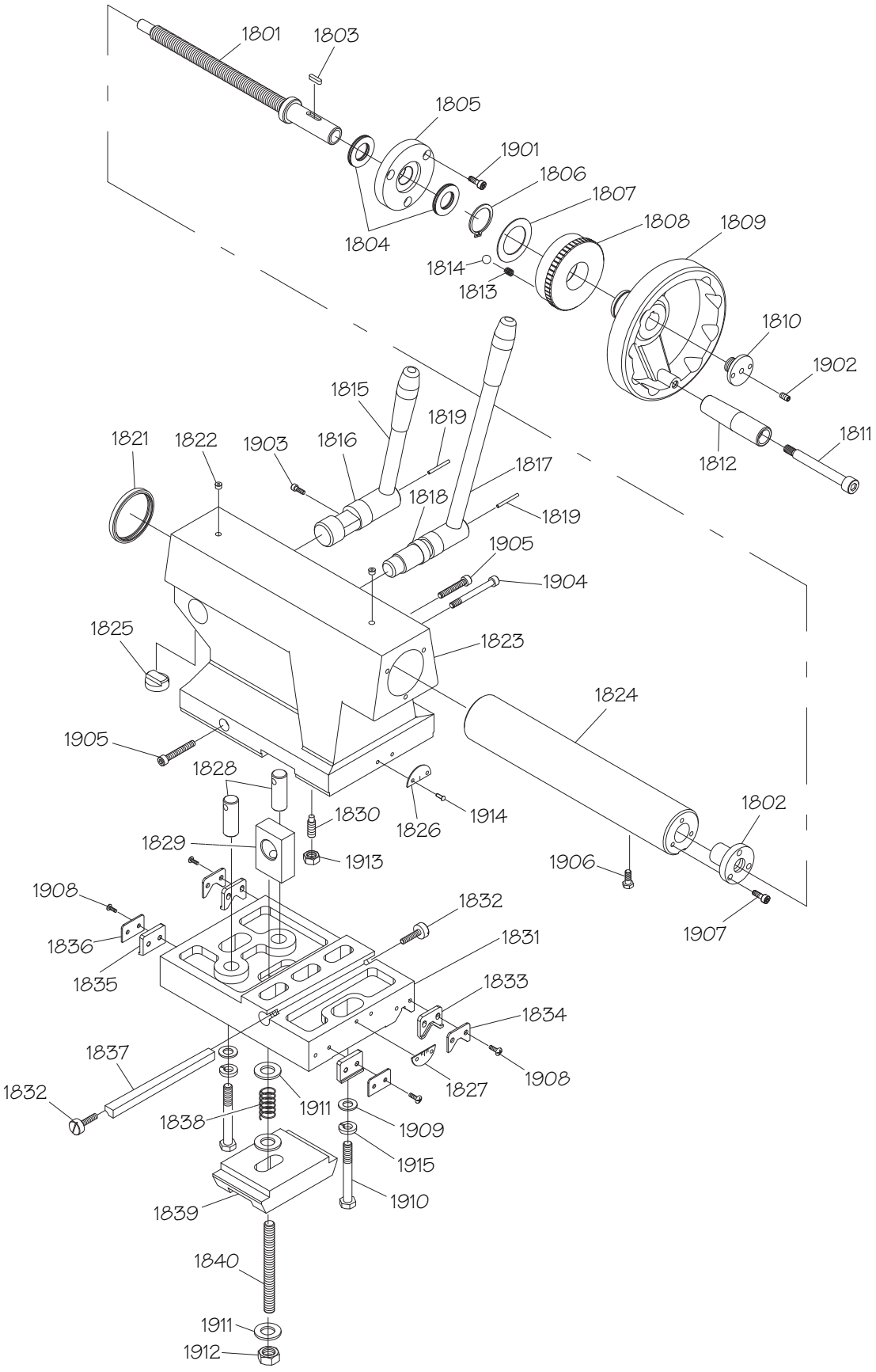
1801
1803
1805
1901
1806
1807
1808
1809
1804
1814
1813
1810
1902
1815
1819
1821
1822
1903
1816
1817
1811
1812
1818
1819
1905
1904
1825
1823
1824
1905
1828
1914
1826
1830
1802
1829
1913
1906
1908
1832
1836
1831
1835
1833
1834
1837
1908
1827
1832
1911
1838
1909
1915
1910
1839
1840
1911
1912

Tailstock Parts List

REF	PART #	DESCRIPTION
1801	PSB10121801	INCH TAILSTOCK LEADSCREW
1802	PSB10121802	INCH LEADSCREW NUT
1803	PSB10121803	KEY 5 X 5 X 20
1804	PSB10121804	THRUST BEARING MTB/AS2-2035
1805	PSB10121805	INCH LEADSCREW FLANGE BRACKET
1806	PSB10121806	EXT RETAINING RING 32MM
1807	PSB10121807	INDEX DIAL SPACER
1808	PSB10121808	INCH INDEX RING
1809	PSB10121809	HANDWHEEL
1810	PSB10121810	HANDWHEEL WASHER 6MM
1811	PSB10121811	HANDLE BOLT M8-1.25 X 90
1812	PSB10121812	HANDWHEEL HANDLE
1813	PSB10121813	COMPRESSION SPRING 6 X 16
1814	PSB10121814	STEEL BALL 1/4
1815	PSB10121815	QUILL LOCK LEVER
1816	PSB10121816	QUILL LOCK CAM SHAFT
1817	PSB10121817	TAILSTOCK LOCK LEVER
1818	PSB10121818	TAILSTOCK LOCK CAM SHAFT
1819	PSB10121819	ROLL PIN 4 X 24
1821	PSB10121821	OIL SEAL DH53
1822	PSB10121822	TAP-IN BALL OILER 1/4
1823	PSB10121823	TAILSTOCK CASTING
1824	PSB10121824	TAILSTOCK QUILL
1825	PSB10121825	QUILL GUIDE KEY
1826	PSB10121826	TOP OFFSET INDEX PLATE
1827	PSB10121827	BOTTOM OFFSET INDEX PLATE
1828	PSB10121828	TAILSTOCK ALIGNMENT PIN

REF	PART #	DESCRIPTION
1829	PSB10121829	PIVOT BLOCK
1830	PSB10121830	DOG POINT SET SCREW
1831	PSB10121831	TAILSTOCK BASE
1832	PSB10121832	GIB ADJUSTMENT SCREW
1833	PSB10121833	V-WAY WIPER
1834	PSB10121834	V-WAY WIPER PLATE
1835	PSB10121835	FLAT-WAY WIPER
1836	PSB10121836	FLAT-WAY WIPER PLATE
1837	PSB10121837	TAILSTOCK GIB
1838	PSB10121838	COMPRESSION SPRING 25 X 45
1839	PSB10121839	CLAMP BLOCK
1840	PSB10121840	TAILSTOCK STUD M14-2 X 110
1901	PSB10121901	CAP SCREW M6-1 X 16
1902	PSB10121902	SET SCREW M6-1 X 12
1903	PSB10121903	CAP SCREW M6-1 X 12
1904	PSB10121904	CAP SCREW M8-1.25 X 70
1905	PSB10121905	CAP SCREW M8-1.25 X 60
1906	PSB10121906	CAP SCREW M6-1 X 8
1907	PSB10121907	CAP SCREW M6-1 X 16
1908	PSB10121908	PHLP HD SCR M5-.8 X 12
1909	PSB10121909	FLAT WASHER 10MM
1910	PSB10121910	HEX BOLT M10-1.5 X 55
1911	PSB10121911	FLAT WASHER 14MM
1912	PSB10121912	HEX NUT M14-2
1913	PSB10121913	HEX NUT M8-1.25
1914	PSB10121914	STEEL FLUTED RIVET 2 X 5MM
1915	PSB10121915	LOCK WASHER 10MM

Steady Rest

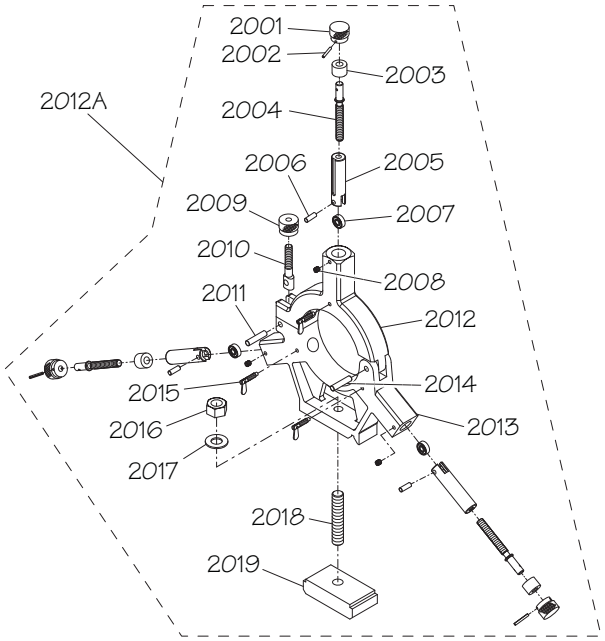

REF	PART #	DESCRIPTION
2001	PSB10122001	FINGER ADJUSTMENT KNOB
2002	PRP51M	ROLL PIN 4 X 40
2003	PSB10122003	FINGER COLLAR
2004	PSB10122004	FINGER STUD
2005	PSB10122005	STEADY REST FINGER
2006	PSB10122006	BEARING DOWEL PIN
2007	P627ZZ	BALL BEARING P627ZZ
2008	PSS20M	SET SCREW M8-1.25 X 8
2009	PSB10122009	CLAMP STUD KNOB
2010	PSB10122010	CLAMP STUD
2011	PSB10122011	CLAMP STUD DOWEL PIN
2012	PSB10122012	TOP STEADY REST CASTING
2012A	PSB10122012A	STEADY REST ASSEMBLY
2013	PSB10122013	BOTTOM STEADY REST CASTING
2014	PSB10122014	HINGE PIN
2015	PSB10122015	SINGLE WING SCREW
2016	PN09M	HEX NUT M12-1.75
2017	PLW05M	LOCK WASHER 12MM
2018	PSB10122018	STUD M12-1.75 X 75
2019	PSB10122019	CLAMP PLATE

Follow Rest

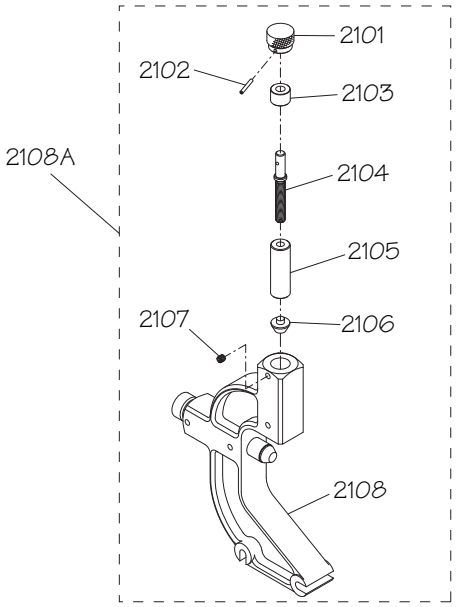

REF	PART #	DESCRIPTION
2101	PSB10122001	FINGER ADJUSTMENT KNOB
2102	PRP51M	ROLL PIN 4 X 40
2103	PSB10122003	FINGER COLLAR
2104	PSB10122104	FINGER STUD
2105	PSB10122105	FOLLOW REST FINGER
2106	PSB10122106	FINGER TIP
2107	PSS20M	SET SCREW M8-1.25 X 8
2108	PSB10122108	FOLLOW REST CASTING
2108A	PSB10122108A	FOLLOW REST ASSEMBLY

Electrical Cabinet & Control Panel

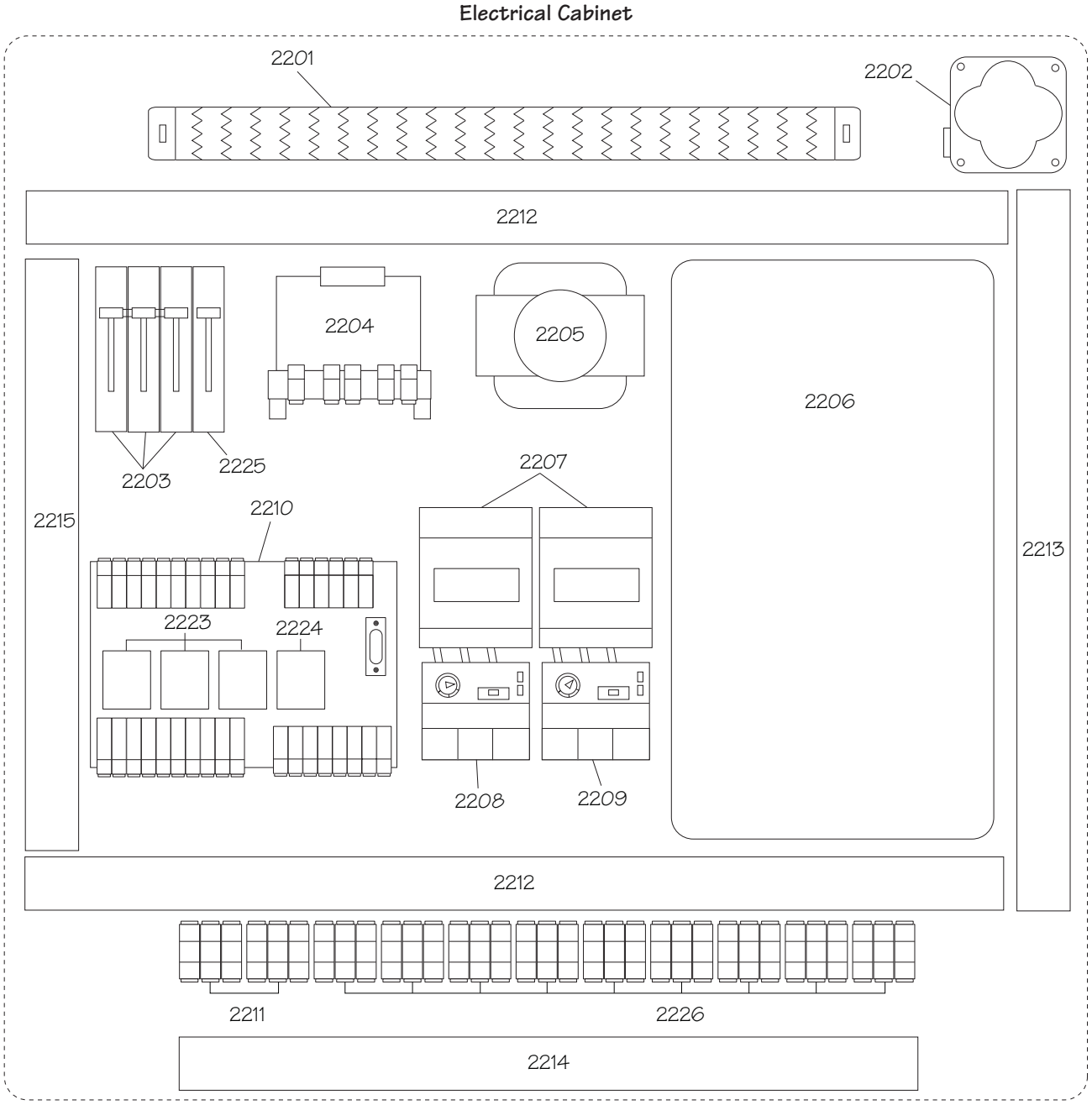

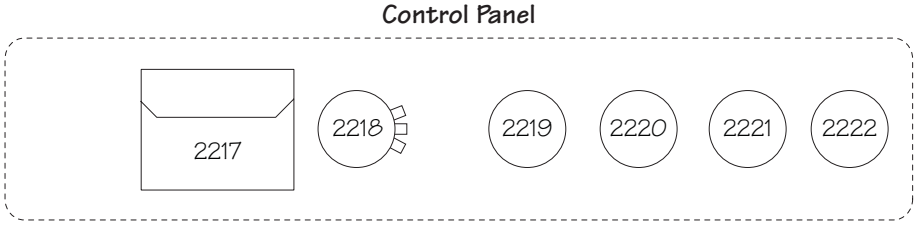

Electrical Cabinet & Control Panel Parts List

REF	PART #	DESCRIPTION
2201	PSB10122201	RESISTOR 600W 40-OHM (SB1012)
2201	PSB10132201	RESISTOR 600W 150-OHM (SB1013)
2202	PSB10122202	CABINET COOLING FAN
2203	PSB10122203	CIRCUIT BREAKER 20A
2204	PSB10122204	TRANSFORMER 24-440V
2205	PSB10122205	MAIN POWER SWITCH
2206	PSB10122206	INVERTER YASKAWA CIMR-G7A23P7 (SB1012)
2206	PSB10132206	INVERTER YASKAWA CIMR-G7A43P7 (SB1013)
2207	PSB10122207	CONTACTOR AB 100-C1001 24V
2208	PSB10122208	OL RELAY AB 193-TAA40 0.24-0.4A
2209	PSB10122209	OL RELAY AB 193TAB24 1.6-2.5A (SB1012)
2209	PSB10132209	OL RELAY AB 193TAB10 0.6-1.0A (SB1013)
2210	PSB10122210	CIRCUIT BOARD
2211	PSB10122211	TERMINAL BLOCK 3-POST 30A

REF	PART #	DESCRIPTION
2212	PSB10122212	WIRE LOOM 17 IN
2213	PSB10122213	WIRE LOOM 16 IN
2214	PSB10122214	WIRE LOOM 14 IN
2215	PSB10122215	WIRE LOOM 12 IN
2217	PSB10122217	TACHOMETER DISPLAY
2218	PSB10122218	SPINDLE SPEED DIAL
2219	PSB10122219	POWER LAMP
2220	PSB10122220	COOLANT PUMP SWITCH
2221	PSB10122221	SPINDLE JOG BUTTON
2222	PSB10122222	EMERGENCY STOP BUTTON
2223	PSB10122223	RELAY OMRON MY4NJ 24VAC
2224	PSB10122224	RELAY OMRON NY2NJ 24VAC
2225	PSB10122225	CIRCUIT BREAKER 6A
2226	PSB10122226	TERMINAL BLOCK 3-POST 15A

Accessories

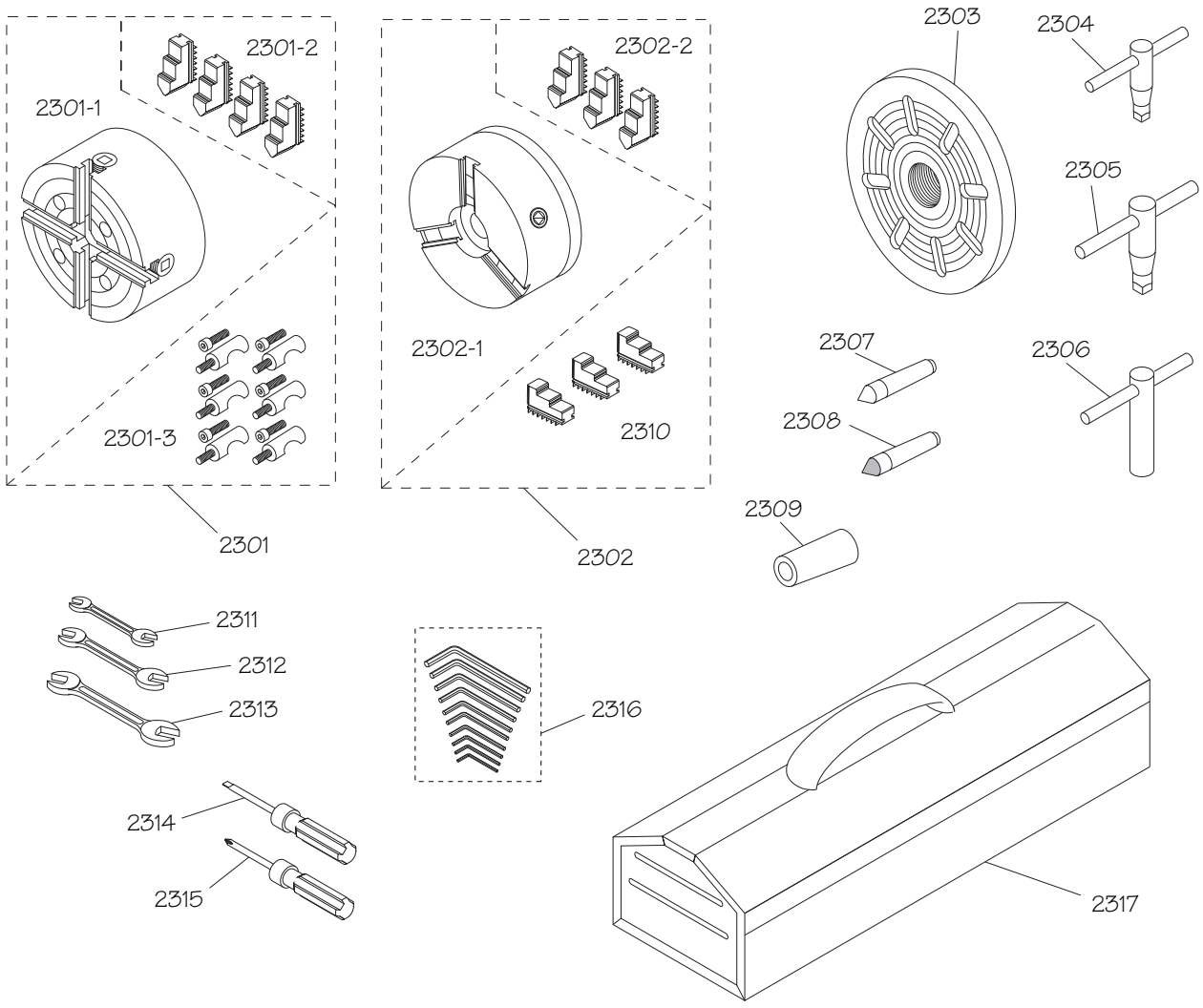

REF	PART #	DESCRIPTION
2301	PSB10122301	4-JAW CHUCK 10" ASSEMBLY
2301-1	PSB10122301-1	4-JAW CHUCK 10"
2301-2	PSB10122301-2	4-JAW CHUCK JAW SET
2301-3	PSB10122301-3	4-JAW CHUCK CAMLOCK STUD SET
2302	PSB10122302	3-JAW CHUCK 8" ASSEMBLY
2302-1	PSB10122302-1	3-JAW CHUCK 8"
2302-2	PSB10122302-2	3-JAW CHUCK STANDARD JAW SET
2303	PSB10122303	FACEPLATE ASSEMBLY 12"
2304	PSB10122304	3-JAW CHUCK KEY
2305	PSB10122305	4-JAW CHUCK KEY
2306	PSB10122306	TOOL POST T-WRENCH

REF	PART #	DESCRIPTION
2307	PSB10122307	STANDARD DEAD CENTER MT#4
2308	PSB10122308	CARBIDE TIP DEAD CENTER MT#4
2309	PSB10122309	SPINDLE SLEEVE MT#4/MT#6
2310	PSB10122310	3-JAW CHUCK REVERSIBLE JAW SET
2311	PWR1012	WRENCH 10/12MM
2312	PWR1417	WRENCH 14/17MM
2313	PWR2224	WRENCH 22/24MM
2314	PSDF2	SCREWDRIVER FLAT #2
2315	PSDP2	SCREWDRIVER PHILLIPS #2
2316	PAW1510M	HEX WRENCH SET 10PC 1.5-10MM
2317	PSB10122317	TOOLBOX

Machine Labels (Front View)

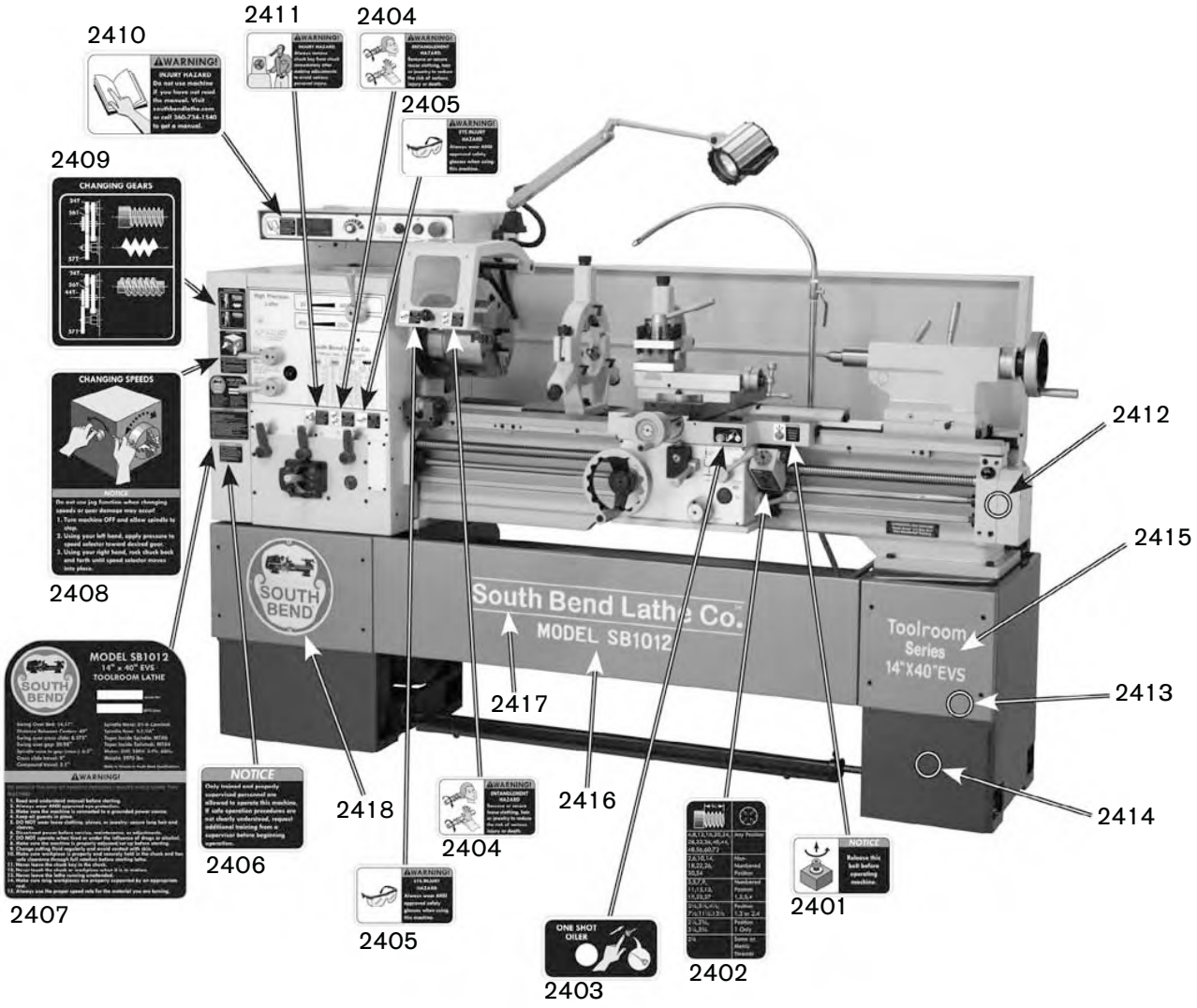

REF	PART #	DESCRIPTION
2401	PSB10122401	RELEASE BOLT NOTICE LABEL
2402	PSB10122402	THREAD DIAL CHART LABEL
2403	PSB10122403	ONE-SHOT OILER LABEL
2404	PSBLABEL08HS	ENTANGLEMENT HAZARD LABEL
2405	PSBLABEL04HS	EYE INJURY HAZARD LABEL
2406	PSB10122406	AUTHORIZED PERSONNEL NOTICE LABEL
2407	PSB10122407	MACHINE ID LABEL (SB1012)
2407	PSB10132407	MACHINE ID LABEL (SB1013)
2408	PSB10122408	CHANGING SPEED NOTICE LABEL
2409	PSB10122409	CHANGING GEARS LABEL

REF	PART #	DESCRIPTION
2410	PSBLABEL01HS	READ MANUAL LABEL
2411	PSB10122411	CHUCK KEY HAZARD LABEL
2412	PSBPAINT01	SB GRAY TOUCH-UP PAINT
2413	PSBPAINT02	SB LIGHT BLUE TOUCH-UP PAINT
2414	PSBPAINT03	SB DARK BLUE TOUCH-UP PAINT
2415	PSB10122415	TOOL ROOM SERIES LABEL
2416	PSB10122416	MODEL NUMBER LABEL (SB1012)
2416	PSB10132416	MODEL NUMBER LABEL (SB1013)
2417	PSB10122417	SB LATHE CO LABEL
2418	SB1322	SOUTH BEND NAMEPLATE 255MM

⚠WARNING

The safety labels provided with your machine are used to make the operator aware of the machine hazards and ways to prevent injury. The owner of this machine MUST maintain the original location and readability of these safety labels. If any label is removed or becomes unreadable, REPLACE that label before using the machine again. Contact South Bend Lathe Co. at (360) 734-1540 or www.southbendlathe.com to order new labels.

Machine Labels (Rear View)

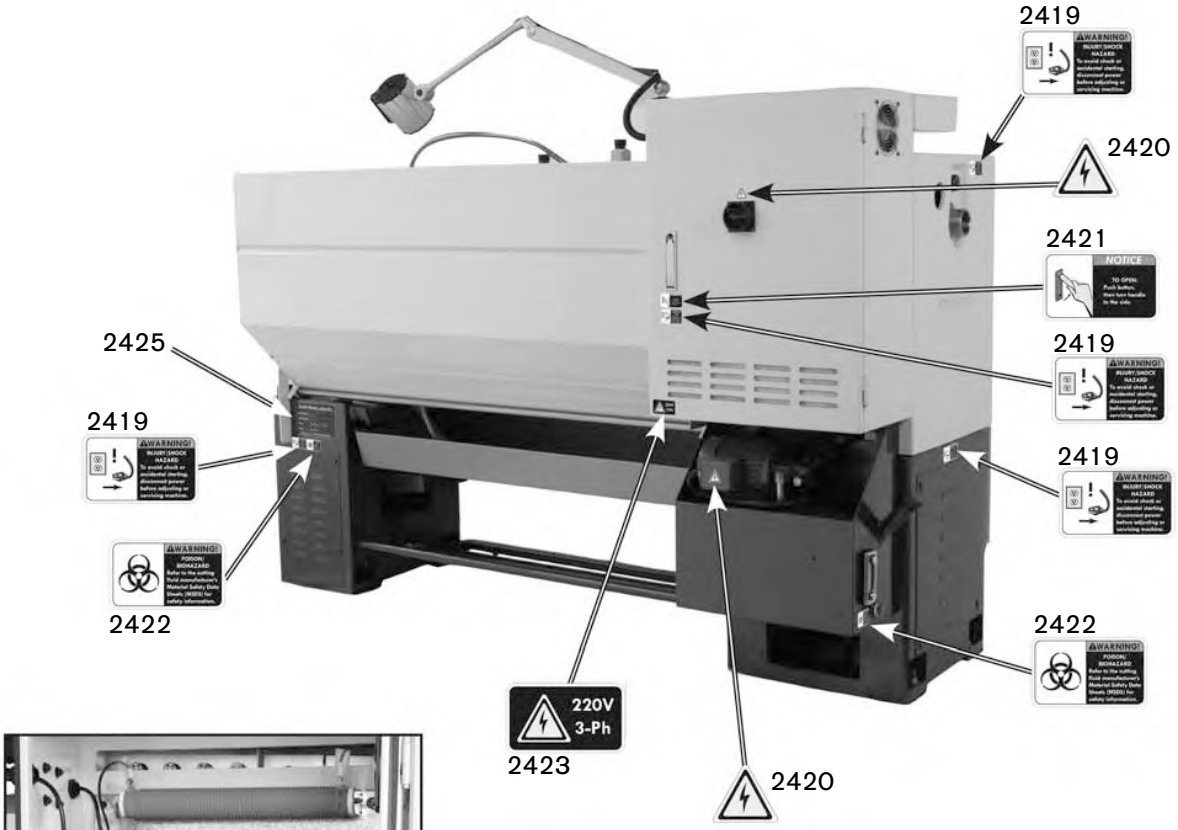

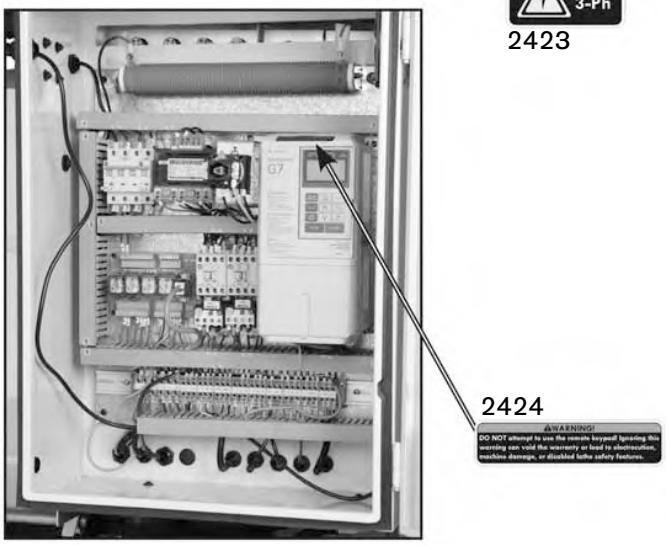

REF	PART #	DESCRIPTION
2419	PSBLABEL01HS	DISCONNECT POWER LABEL
2420	PSBLABEL15M	ELECTRICITY LABEL
2421	PSB10122421	ELECTRICAL CABINET LATCH LABEL
2422	PSBLABEL06HS	BIOHAZARD LABEL

REF	PART #	DESCRIPTION
2423	PSB10122423	220V 3-PHASE LABEL (SB1012)
2423	PSB10132423	440V 3-PHASE LABEL (SB1013)
2424	PSB10122424	INVERTER WARNING LABEL
2425	PSB10122425	MOTOR SPECIFICATIONS PLATE

SOUTH BEND®

South Bend Lathe Co.
P.O. Box 2027
Bellingham, WA 98227

PHONE: (360) 734-1540 (Administrative Offices)
FAX: (360) 676-1075 (International)
FAX: (360) 734-1639 (USA only)

southbendlathe.com

Printed In Taiwan

#TS12278